INTERNATIONAL PHASE OF OCEAN DRILLING (IPOD)
DEEP SEA DRILLING PROJECT
DEVELOPMENT ENGINEERING
TECHNICAL REPORT NO. 12

DESIGN AND OPERATION OF THE HYDRAULIC PISTON CORER

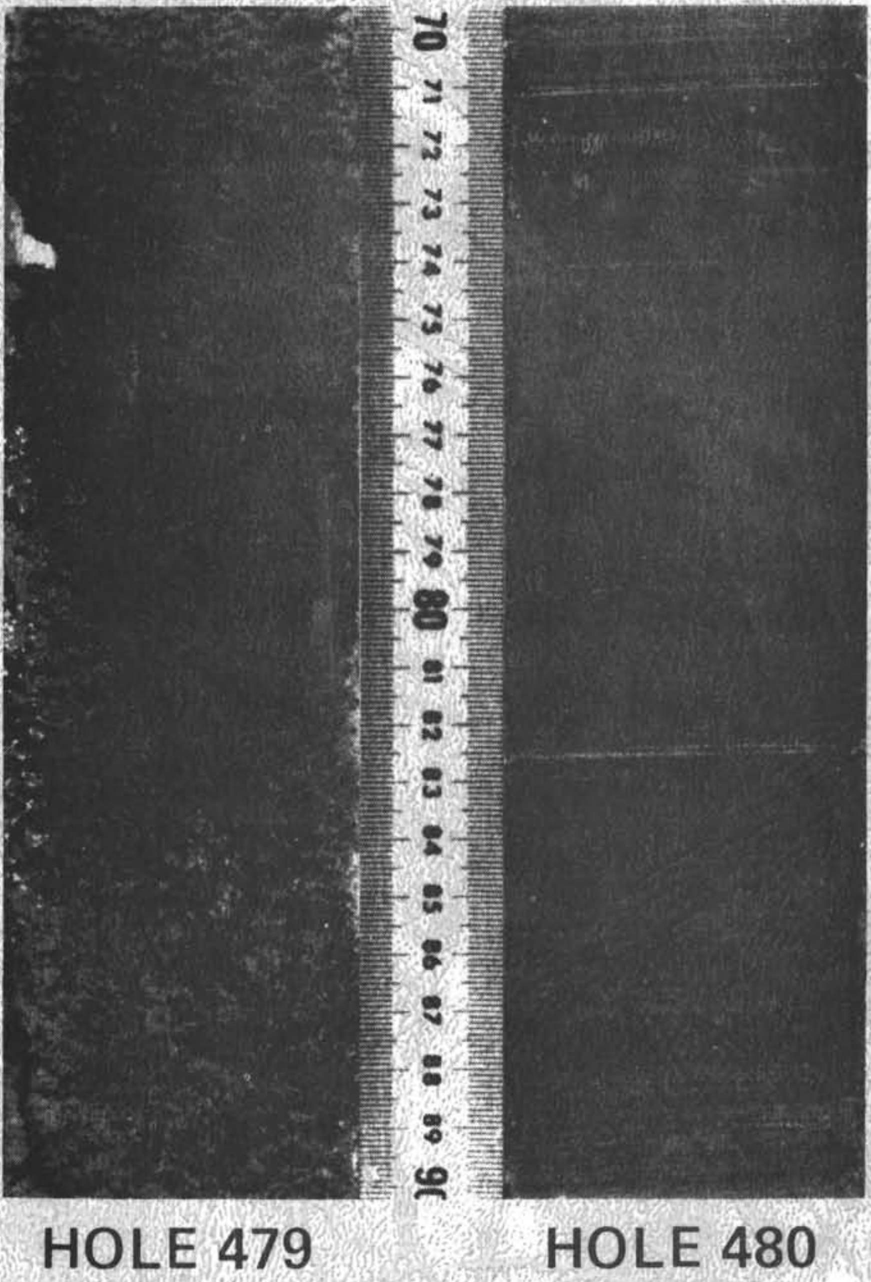

SCRIPPS INSTITUTION OF OCEANOGRAPHY
UNIVERSITY OF CALIFORNIA AT SAN DIEGO
CONTRACT NSF C-482
PRIME CONTRACTOR : THE REGENTS, UNIVERSITY OF CALIFORNIA

DISCLAIMER

This report was prepared by the Deep Sea Drilling Project, University of California, San Diego as an account of work sponsored by the United States Government's National Science Foundation. Neither the University nor any of their employees, nor any of their contractors, subcontractors, or their employees, makes any warranty, express or implied, or assumes any legal liability or responsibility for the accuracy, completeness or usefulness of any information, apparatus, product or process disclosed, or represents that its use would not infringe privately owned rights.

THE COVER PICTURE

The two cores shown on the cover are from Leg 64, The Guymas Basin. Both cores recovered Quaternary sediments, and despite the great difference in degree of disturbance, the shipboard party concluded that the upper 152 m is duplicated in the two holes. The following is an excerpt from the shipboard core descriptions:

> Site 479, Core 12 Cored Interval: 98 to 107.5 m sub-bottom
> 100% recovery
>
> "Uniform, moderate olive brown (5Y 4/4) muddy diatomaceous ooze, and rare streaks of lighter pale olive (10Y 6/2). Any bedding has been totally disturbed. No evidence of varves, sand or H_2S gas."
>
> Site 480, Core 20 Cored Interval: 95 to 99.5 m sub-bottom
> 99% recovery
>
> "Moderate olive brown (5Y 4/4) muddy diatomaceous ooze and pale olive (10Y 6/2) diatomaceous ooze laminae occur together as varve-like couplets on a mm-scale. A gray sand layer occurs with a discordant, sharp contact against the varves, but shows no grading. Unconformities and some cross-bedding observed in the varved section."

Core 12, Site 479 was taken using conventional rotary drilling technique.
Core 20, Site 480 was taken using the Hydraulic Piston Corer (HPC-15).

(Excerpt from JOIDES Journal
Vol. V, No. 2, June 1979)

TECHNICAL REPORT NO. 12

Prepared for the
NATIONAL SCIENCE FOUNDATION
National Ocean Sediment Coring Program
Under Contract C-482
by the
UNIVERSITY OF CALIFORNIA
Scripps Institution of Oceanography
Prime Contractor for the Project

May 1983

W. A. Nierenberg, Director
Scripps Institution of Oceanography

M. N. A. Peterson
Principal Investigator and
Project Manager
Deep Sea Drilling Project
Scripps Institution of Oceanography

INTRODUCTION

This Deep Sea Drilling Project Technical Report No. 12 includes a paper on the design and operation of the Hydraulic Piston Corer authored by M.A. Storms, Wil Nugent and D. H. Cameron. Design analyses and detail drawings are included in an appendix.

The Hydraulic Piston Corer was developed at the Deep Sea Drilling Project in response to a scientific requirement for undisturbed core of the upper unlithified section of the seafloor. Conventional coring practice severely disturbed the soft oozes and clays. The new tool recovered complete and undisturbed cores greatly improving stratigraphic resolution. The device also extended by an order of magnitude, the depth capability of piston coring. Conventional piston and gravity corers were limited to approximately 30 meters of penetration. The hydraulic piston corer, through its repeatable process, has penetrated sediments in excess of 300 meters below the seafloor.

Operational tests of the 4.5 m Hydraulic Piston Corer conducted on Leg 64 (December 1978-January 1979), obtained an almost totally undisturbed and complete section from a 152 meter hole along the Guaymas slope in the central Gulf of California. The Hydraulic Piston Corer fully penetrated sediments with shear strengths of 1200 grams per square centimeter recovering in excess of 80% on most cores. Penetration decreased with increasing sediment stiffness. The maximum shear strength of recovered sediment was 3185 grams per square centimeter.

Beginning with Leg 80 (May 1981-July 1981), an improved coring system, referred to as the Variable Length Hydraulic Piston Corer (VLHPC), was utilized. The VLHPC is capable of recovering cores up to 9.5 m in length. Recovery has averaged more than 93% with some holes achieving 100%. In addition, an absolute core orientation system was added and a capability to measure heat flow in situ.

Piston coring operations are conducted with the wireline remaining attached to the barrel. This saves the time required to pump down the core barrel and makes for a more efficient coring system.

The VLHPC recovers core in a standard butyrate core liner. The core bit used is a special 11.5" O.D. roller cone core bit with a 3.62" core throat. Coring must be discontinued when the sediments become too indurated. The VLHPC system is not designed for drilling and coring in hard rock.

A coring system is under development which will be capable of continuing the penetration on to basement. This coring system, called the Extended Core Barrel (XCB), will be compatible with the VLHPC bottom hole assembly. Thus, the XCB will continue coring from that point at which VLHPC coring operations are halted without necessitating a trip of the drill string.

ACKNOWLEDGEMENTS

The Hydraulic Piston Corer (HPC) was designed and developed by Mr. M. A. Storms of the Deep Sea Drilling Project's development engineering group. The HPC proved to be a highly successful adaptation of rotary coring capability to the taking of high quality piston cores. The concept of a high-speed hydraulic ram/corer powered by rig pump pressure has extended the reach of high quality piston cores from 30 to 300 meters below the seafloor of the deep ocean. This capability is contributing to improved understanding of the earth's past climate and to geologic processes reaching back some 15,000,000 years. Mr. Wil Nugent contributed to the system through mathematical analysis and design. Mr. D. Cameron assisted with fabrication and sea trials of the HPC. Mr. S. T. Serocki, Chief Development Engineer, provided general direction of the work. Overall supervision was by Mr. F. C. MacTernan, Deputy Project Manager.

MNA Peterson

M. N. A. Peterson
Principal Investigator
and Project Manager
IPOD/DSDP/SIO

CONTENTS

HYDRAULIC PISTON CORING
LIST OF FIGURES

LIST OF TABLES

HYDRAULIC PISTON CORING
A NEW ERA IN OCEAN RESEARCH

by

M. A. Storms
Wil Nugent
D. H. Cameron

ABSTRACT

In December of 1978, the Deep Sea Drilling Project, International Phase of Ocean Drilling, deployed the first hydraulically actuated piston corer. This coring system utilized a hydraulic piston principle. Fluid was pumped through the drill pipe, activating a piston driven core barrel which was ejected into the sediment at the rate of approximately 20 feet per second. This extremely high penetration rate effectively decoupled the core barrel from the heave induced vertical motion of the drill string. On completion of each coring operation, the core barrel assembly was retrieved by wireline. The core bit was then "washed" down to the next coring point where the piston coring procedure was repeated. Operational tests conducted in 865 meter water depth during Leg 64 obtained an almost totally undisturbed and complete section from a 152-meter hole along the Guaymas slope in the central Gulf of California. Variations in climate, productivity and circulation for more than 250,000 years were recorded. This paper describes the analysis, design, testing and field operation of the hydraulic Piston Coring System.

Deep Sea Drilling Project

The Deep Sea Drilling Project (DSDP) began coring in August of 1968. Funding and direction was given by the National Science Foundation's (NSF) Ocean Sediment Coring Program. Their mandate was to increase man's knowledge of the earth's development through an ambitious ocean sediment coring program. The Prime Contract for the Project was executed in 1966 between NSF and the University of California (UC) Board of Regents. Scripps Institution of Oceanography, an integral part of the UC system, was to be responsible for management of the Project. Global Marine Inc. (GMI), through a subcontract with Scripps, was to provide the drilling vessel and crew.

Major oceanographic institutions of the United States were called upon to support the proposed drilling program by contributing to the planning of the scientific objectives. The resultant organization became known as "Joint Oceanographic Institutions for Deep Earth Sampling (JOIDES". These institutions for Deep Earth Sampling (JOIDES)". These institutions continue to provide scientific guidance for the drilling effort.

International Phase of Ocean Drilling

Prompted by the vast scientific and technical successes of the first seven years, the Project increased the scope of the coring program to include even deeper penetrations into the ocean floor. International interest in the Project was increasing. Several foreign scientific institutions, excited by past scientific results and confident of future successes, were interested in becoming members of JOIDES. These institutions were willing to contribute financially to the Project in exchange for a greater role in the scientific planning. In 1975, the "International Phase of Ocean Drilling", known as IPOD, was born. IPOD was an initial three-year Deep Crustal coring Program supported both scientifically and financially by the governments of France, Germany Japan, England and Russia.

D/V GLOMAR CHALLENGER

The GLOMAR CHALLENGER, with its unique coring procedures, has long been recognized as a major technical achievement in its own right. The 10,500 metric ton drillship utilizes an advanced on-board computer and dual bow and stern thrusters to dynamically position itself. The CHALLENGER has operated as far north as 76° latitude; as far south as 77° latitude and has the capability to maintain its station in 30-knot winds and 7-10 foot seas. Similar to conventional drillships, the vessel incorporates a 43-meter derrick amidship with a hookload capacity of 450 metric tons and can deploy a 7000 m drill string. The CHALLENGER utilizes an automatic pipe racker capable of handling 7,300 meters of 5-inch S-135 drill pipe, and is equipped with a drill pipe heave compensation system.

Most coring operations are conducted in very deep water and all sites are carefully screened to ensure that there is no possibility of encountering gas or hydrocarbons. For these reasons no riser or blow prevention equipment is used. Circulation while coring is provided by two National 1600 mud pumps and consists of seawater without return circulation. Core barrels are retrieved by wireline utilizing a coring winch equipped with up to 7900 m of 6 x 16 wire rope. Well equipped shipboard scientific laboratories are utilized to conduct comprehensive core analyses.

SCIENTIFIC OBJECTIVES

The development of the Hydraulic Piston Corer (HPC) was in response to a basic need in the science community to recover high quality cores, particularly in soft sediments. The upper 200 meters of the sedimentary column were highly disturbed during the rotary drilling process. Attempts at detailed disciplines such as paleoceanography, paleoclimatology, magnetostratigraphy and high resolution stratigraphy were all but impossible. It was apparent that some means to overcome the limitations of rotary drilling in unlithified sediments was required. Piston cores historically have provided a means to distinguish events recorded in sediments as little as one thousand years apart; events that are homogenized by rotary drilling. Oceanographic vessels were routinely taking piston cores of mudline sediments. These "conventional" piston coring systems, however, were limited to just a few tens of meters of the surface material, lacking the capability for any significant penetration.

At the request of the science community, the Deep Sea Drilling Project undertook the development of a wireline retrievable piston coring system. This new coring system was to make use of all the advantages of a "conventional" piston coring system yet be compatible with the GLOMAR CHALLENGER'S coring operation and have the capability to penetrate up to 200 meters below the ocean floor.

PROTOTYPE DESIGN

In responding to the scientific mandate for a CHALLENGER piston corer, a set of design and operational criteria were compiled which would govern the development of this new coring system. The corer was to be operated hydraulically; the driving force for the coring system would be the circulating pumps aboard the GLOMAR CHALLENGER. These pumps would be used to pressure the drill string. When released, the energy would drive the core barrel into the sediment at a high rate of speed (Figure 1). Actuation pressure was limited to the 2800 psi operating pressure of the circulating system. The tool was required to be wireline retrievable through 5" drill pipe with a nominal 4.12 inch inside diameter. Scientific preference dictated the nominal 2.43 inch (6.20 cm) core size.

Several areas of concern were investigated including potential column and bending loads imposed upon the core barrel itself; what lateral support could be expected from the formation and what penetration rate would have to be achieved to effectively decouple vessel motion from the tool during the coring operation.

It was recognized that occasionally the coring instrument would be ejected at a high velocity into sediment with little or no resistance. For this reason a dampening system had to be incorporated at the end of the stroke, to lower impact forces.

The Hydraulic Piston Corer design criteria was based on using equipment and techniques already developed, and proven successful, in deep sea drilling operations aboard the GLOMAR CHALLENGER. In addition, a review of advanced conventional piston coring operations was conducted with particular emphasis on sediment stiffness and shear strengths encountered in these tests. The information on subsurface foundation material densities and shear strengths compiled in DSDP Technical Report No. 9, dated September 9, 1976, was included in this review.

The design objectives were:

- Assess the friction coefficient of the subsurface material(s) entrained in the Hydraulic Piston Core (HPC) tool, at various penetration velocities, consistent with shipboard pumping capacity.
- Develop mechanization schemes in support of the HPC design.
- Prepare a hydraulic analysis, determine orifice sizes, and flow conditions compatible with the pumping system.
- Establish structural guidelines to ensure safety, repeatability of performance, and fabrication capability using immediately available materials.
- Implement safeguards such as snubbing to reduce end stroke impact.

- Develop procedures for assembly and handling of the HPC compatible with rig floor operations.

ANALYTICAL ANALYSIS

Frictional resistance to coring was recognized to result from sediment shear, internal drag resistance of material being entrained in the corer tube, choking or overspilling at the leading edge of the tool, and external friction. Efforts were directed to the development of a single constant which could be used to characterize the total resistance. The shipboard rig pump pressure and available annulus area provided the force on the core barrel column. The displacement volume of the rig pump provided the core barrel penetration rate. A discharge orifice controlled the discharge rate of the seawater from the lower chamber, and established the maximum achievable corer barrel penetration rate.

An input force is applied by pressure on the piston. The frictional resistance consisted of mechanical sliding friction and the frictional resistance or drag due to the rate at which the hydraulic piston corer penetrated into the sediment.

The sediment was characterized as an emulsified substance rather than a slurry containing particles of discrete size suspended in a fluid. These sediments could be ooze and/or unlithified bases with shear strengths ranging from 100 to 300 grams per square centimeter. The particle grain size was small, less than 0.5 mm average diameter and greater than 50% seawater saturated.

These conditions were recognized to be outside the bounds of discrete particles, and not absolutely fluidic. The substance was similar to a dough which flows as a homogeneous mass, distinct from a turbulent fluid.

It was essential that the corer penetration velocity be controlled. Too fast a penetration rate could cause structural damage to the corer itself or induce core disturbance such as liquifaction. Too slow a penetration rate would fail to decouple the corer from the drill pipe motion, again inducing excessive core disturbance.

With these restraints in mind a velocity requirement was selected in the range of 20 feet per second and decaying not below ten feet per second during the entire coring operation.

The analysis was based on 2000 psi pump pressure and greater than 350 gallons per minute pump delivery capability to the bottom of the drill string. No allowance for compressibility of fluid was taken into account. Since the pump pressure acting on the annulus produces the coring force, the pump displacement (flow rate) produces the corer velocity. The discharge orifice, required for venting seawater from the lower chamber, was used to control the velocity of the corer. For analytical purposes it was assumed that the upper and lower chamber volumes were approximately equal. The effective pressure which discharges fluid through the orifice then becomes the net pressure, or the force on the annulus less the sediment resistance.

Other pressure losses which may occur at the discharge orifice were not considered in the analysis.

The discharge orifice is important in controlling the rate of corer penetration. For a given pressure and penetration resistance, presuming that sufficient fluid flow is available to maintain the pressure, the corer tube will travel at a velocity dependent upon the volume rate of discharge through the orifice.

The characteristics of flow through an orifice are well defined, but the behavior of the sediment when producing resistance to the force on the corer piston requires some definition, particularly for variations in sediment compaction, geology, and the depth of penetration desired.

Although the various sediment types behave neither as a fluid nor as a series of discrete particles, it was recognized that they do have a common characteristic during coring, that is the frictional or drag resistance, which is dependent upon the equation $\tau = \mu \frac{dv}{dx}$ from which the viscosity (μ) of a homogenous substance may be derived when the shear stress is known.

It was assumed that the sediment was "fractured" at an infinite number of diametrically opposite locations along the circumference of the corer during penetration. Knowledge of the sediment shear strength and density allowed an estimate for a friction coefficient (f). Viscous flow conditions were assumed and the characteristic drag expression $D = \frac{1}{2} pv^2 fX(\text{area})$, where v = penetration velocity and p = the mass density of the sediment, were used to define the drag resistance for each successive foot of core barrel penetration. This analytical approach connected the behavior of the material to be cores with the energy available to operate the hydraulic piston corer and the desired rate of penetration.

The drag term represented the sediment resistance to coring, and was a function of velocity. In this approach a theoretical velocity exists prior to establishing equilibrium between the driving force and the resisting force. When penetration resistance equals the force available the piston corer stops (Figure 2). Using these elementary approaches, the performance characteristics of the HPC have to date been predictable within reasonable limits.

A Fortran program was compiled which provided HPC operating forces and computed the working stress level at the critical sections of the piston corer column. This program enabled input changes to sediment shear strength, hydraulic pressure and/or shear pin release, effective piston area, side hole support, and penetration velocity to simulate actual operational conditions.

The computer generated output showed good correlation with the results from coring operations in sediment with shear strengths up to 1200 g/cm^2 (2457 lb/ft^2). Experience in operation confirmed that the hydraulic piston corer performed well in water depths of 3500 m (11,483 ft), and in sediment shear strengths of 2,513 g/cm^2 (5,146 lb/ft^2) the piston velocity was reduced to zero. Total stroke indication was not observed, although 3.26 m (10.7 ft) of core was retrieved.

Operational results relating shear strength, hydraulic pressure and the length of core recovered, were used to develop an empirical coefficient; which accounted for the observed increase in resistance to coring, with increase in depth of penetration. These sample data were included in an analysis, which yielded the mean values for shear strength, length of core recovered, and applied pressure during coring.

Figure 2 is a data plot predicting the performance of 4.4 meter coring tool used on Leg 68. A sediment drag coefficient was developed using an expression for a uniform two-dimensional flow, which applies the effects of sediment shear strength and mass density.

STRUCTURAL COLUMN

Deflection of the HPC column, resulting from penetration on sloping faces, or offline impact against rock formation, was included as a constraint and analyzed.

This analytical procedure enabled the stresses to be calculated at critical sections, i.e. thread undercuts, etc., along the corer barrel by predicting the deflection and calculating the bending moment.

Additional analysis and scale model tests were conducted to determine the behavior of the upper shaft and the piston rod, for various lengths of HPC configuration. The corer barrel is unsupported when extended beyond the drill bit, but the upper shaft and the piston rod are constrained against deflection with the drill collar assembly. A moment distribution analysis and a static load test on a scale model (Figure 3) showed good correlation.

The result indicated that the maximum rig pump pressure could be applied on the HPC piston configuration, and that precautions should be taken in instances where hole drift angle or excessive side loads could be encountered. A preliminary computer program was compiled, to generate parametric data relating stress and coring length, to various differential side forces applied midway between the cutting shoe, and the drill bit support on the core barrel. Figure 4 presents the results, which indicate the potential to core into 1200 g/cm sediment and retrieve 30 ft (9.5 m) cores, using core barrels fabricated of 4130 CD steel.

OPERATION

The Hydraulic Piston Corer consists of two basic assemblies. An inner assembly which remains stationary during activation of the tool and an outer assembly, which scopes down along the inner assembly during tool operation (Figure 5).

When the tool is in the closed position (ready to run), shear pins secure the outer assembly to the inner assembly.

The tool is lowered down the drill pipe on the wireline until the top sub lands in a special head sub located in the bottom hole assembly. Circulation is then initiated. As the drill string begins to pressurize, the seals around the top sub effect a seal in the head sub. Pressurized water is directed through the top sub and shaft, and out the lower end of the inner seal sub into the annulus between the inner and outer seal subs.

The pressure increases until the pins shear; then the outer seal sub (attached to the outer assembly) is forced down and away from the inner seal sub (attached to the stationary shaft and piston rod). As the outer body penetrates the mud, the piston head remains stationary, causing the fluid above to be vented to the annulus. At the end of its stroke the inner seal sub, which seals along the outer body, uncovers a set of control orifices drilled through the vent sub body wall. The pressurized fluid can then vent through the orifices to relieve the pressure in the drill string and give the rig floor an indication that the corer has fully stroked. The core barrel is then retrieved, the core bit is washed down to the next coring point, and the sequence begins again.

SHORE BASED TESTING

Prior to field deployment a comprehensive shore based performance test was conducted. The objectives of this test were to verify the mechanical actuation, operation, and structural integrity of the hydraulic piston corer. Variables included sediment shear strength, flow rate, and shear pressure, i.e. that pressure at which the barrel releases and begins to move into the sediment.

Energy for the test system was supplied by a BJ Pacemaker "Duplex" cementing unit. This unit could supply the minimum flow rate of 350 gpm at 2000 psi required for the test.

Four different mixes of clay products were purchased to provide several variations in stiffness for the test. Table I shows the physical properties and compositions of the products used. For ease of handling, the clay was put into standard "Burke" fiber tubes normally used for pouring concrete columns. The tubes used were 12.0" inside diameter by .225" wall (regular) and were 15' in length. To support the Burke tubes during handling, a hanger system was fabricated using 16" casing. This "holder" allowed easy insertion and retrieval of the clay filled tubes into and out of the test hole. The test hole was 46-feet deep and lined with 24-inch diameter casing. The piston corer itself was handled with the aid of a 3-ton electric chain hoist located directly over the hole.

An instrumentation system was developed to determine the average penetration velocity of the tool. A pressure transducer was put in line from the BJ Pacemake pump to the test assembly. Input from the transducer was fed as an analog signal into an 8-channel multiplexed data acquisition system connected to an IBM 1130 computer. Figure 6 shows a typical pressure vs time curve obtained during a full sequence of tool operation. From this curve the shoot off point and end of stroke venting can be taken. Knowing the distance traveled and elapsed time, an average penetration velocity was determined. Test data collected with the instrumentation system compared favorably with the previously calculated theoretical data.

OPERATIONAL SEA TRIALS

Sea Trials were conducted on the Hydraulic Piston Corer in December 1978 and January 1979, during Leg 64. The new tool was run a total of 52 times on three sites in the Guaymas Basin of the Gulf of California.

At Site 480 (water depth 657 m), 32 cores were taken to a subbottom depth of 152 meters with an average of over 80% recovery (well over 90%, if two low recovery cores are excluded). Finely laminated sedimentary sections ranging from soft mud to very firm diatomaceous ooze were recovered virtually undisturbed. The singular success of the HPC on this site is underlined when compared to the poor quality of cores recovered in the upper 100 m through rotary coring at Site 479, only 6.8 km to the southwest (Figure 7). Only two cores had little or no recovery. On several of the lower depth runs the core liners returned cracked or partially collapsed. This is believed to have been caused by pull-out suction created when retrieving the HPC from increasingly stiff sediments. The recovery was still good and undisturbed except for the short lengths of liner collapse.

The supply of shear pins was depleted after the numerous runs at Site 480, so for the 16 runs at Site 481 (water depth 2016 m) new pins were fabricated from 3/16" brass brazing rod. Sixty four per cent of the 52.25 m sedimentary column cored was recovered, although six cores, including the last two, recovered over 90 per cent. The intermittently low and high recovery may have been due either to possible wide variations in the shear strength of the new pins, or in the sediment type (e.g., sandy layers.) The latter seems probable since two of the low recovery intervals were recored with the same results. The sediments recovered were, again, undisturbed. The core liners did not collapse or crack on any of these runs.

Throughout the tests, routine maintenance on the HPC consisted of replacing seals as needed and complete breakdown and redressing between sites. The internal seals could not be inspected routinely but were still operable when replaced between sites. The external top sub packing was lost or damaged quite frequently during the earlier runs, but lasted much longer (10 runs) when the retrieval rate was slowed from 300 meters/min to 100 meters/min. Being one-way seals, they tended to flare out and grab at each tool joint if the HPC was retrieved too quickly.

As the rig crew became familiar with handling the HPC, the turnaround time on deck was trimmed to 20 minutes when using a single lower core barrel section. It would have been even faster had they been able to alternate between two lower sections, but one was lost on Site 477A. The time between cores still was only slightly longer than for standard coring operations.

TECHNICAL IMPROVEMENTS

The objective of developing a capability to recover 9.5 m undisturbed cores through the 13 cm (5-inch) drill pipe was not abandoned. An assemblage of components were designed with the purpose of configuring 9.5 m, 8 m, 6.5 m, 5 m, and 3.5 m hydraulic piston corer units by rearrangement of common elements adapted to a single seal-sub within the drill pipe. This unit, designated as the Variable Length Hydraulic Piston Corer (VLHPC), enables coring to be accomplished over a wide range of sediment formations to the limit of the shipboard rig pumping capacity (Figure 8). To date there has been exceptional success with VLHPC operations. After the initial runs, the drill crew handled the entire operation. The VLHPC does not require extensive redressing between runs, and the turnaround time on deck takes about five minutes. The features of this simplistic design approach have been projected into future designs to develop extended coring capability into stiffer formations.

The available force in deep ocean hydraulic piston coring decreases slightly as the corer barrel extends. In the computer program, the resisting force produced by corer penetration is a function of velocity. When the plot of the product of velocity and effective drag coefficient intersects the curve produced as a function of rig pressure and piston area, the corer stroke is assumed to be arrested. The results from operations have validated the analytic procedure within the range of present usage.

ABSOLUTE CORE ORIENTATION

The ability to recover undisturbed soft cores without rotating led quite naturally to a request from the scientific community to develop a means of preserving the downhole azimuthal orientation of the cores. This has been achieved by "piggybacking" a Kuster single-shot survey instrument onto the VLHPC. The Kuster tool is actually incorporated into the sinker bar string which latches onto the VLHPC Top Sub. The Kuster unit essentially consists of a transparent compass and reference line overlaying a film disc, a battery operated delay timer, a magnetic sensor, and a light source. An orientation line on the core liner is aligned with the reference line within the Kuster unit. When the VLHPC is landed in the drill string, the Kuster tool is positioned within a special non-magnetic drill collar. The sensor detects the change in the magnetic field and activates the delay timer which, in turn, activates the light source to take a picture of the compass and reference line. The film is later developed to reveal the angle between magnetic north and the reference line.

OPERATIONAL PERFORMANCE

The original version of the Hydraulic Piston Corer (HPC) was successfully operated aboard the D/V GLOMAR CHALLENGER from December 1978 until May 1981. Its successful performance immediately led to the development of its successor, the Variable Length Hydraulic Piston Corer (VLHPC). This highly improved version has now been deployed in the field for over a year with impressive scientific results. Statistical data for both versions of the HPC can be found in Tables II and III. The application of this new coring technology to the field of earth sciences has unquestionably been a success. Expansion to areas such as geotechnical research and engineering may have even wider reaching ramifications.

Efforts are now underway to develop a coring system which can take over when the HPC system has reached its limitations. This "extended" core barrel (XCB) shown in Figure 9, will be designed to drill down to and into basement, without requiring a pipe trip or change of the HPC bottom hole assembly. The compatibility of these two coring systems is shown in Figure 10.

SCIENTIFIC REWARDS

The Deep Sea Drilling Project (DSDP) Hydraulic Piston Corer (HPC) was developed in response to a major scientific need to recover undisturbed cores from the deep ocean. The technical success of the HPC quite naturally led to an improved successor known as the Variable Length Hydraulic Piston Corer (VLHPC). Hydraulic Piston Coring has been in operation aboard the GLOMAR CHALLENGER for over four years. The scientific rewards are too numerous to mention. DSDP expeditions centering around the use of the hydraulic piston corer have proven to be major successes. The routine recovery of complete geological sections with little or no disturbance has given rise to many new disciplines within the field of marine geology. These new or expanded fields of study are enabling earth scientists to make quantum leaps in their understanding of the earth and its oceans. The potential of this new technology and its contribution to the advancement of earth science research will probably not be fully determined for many years to come.

Figure 1

HYDRAULIC PISTON CORER

CONCEPT

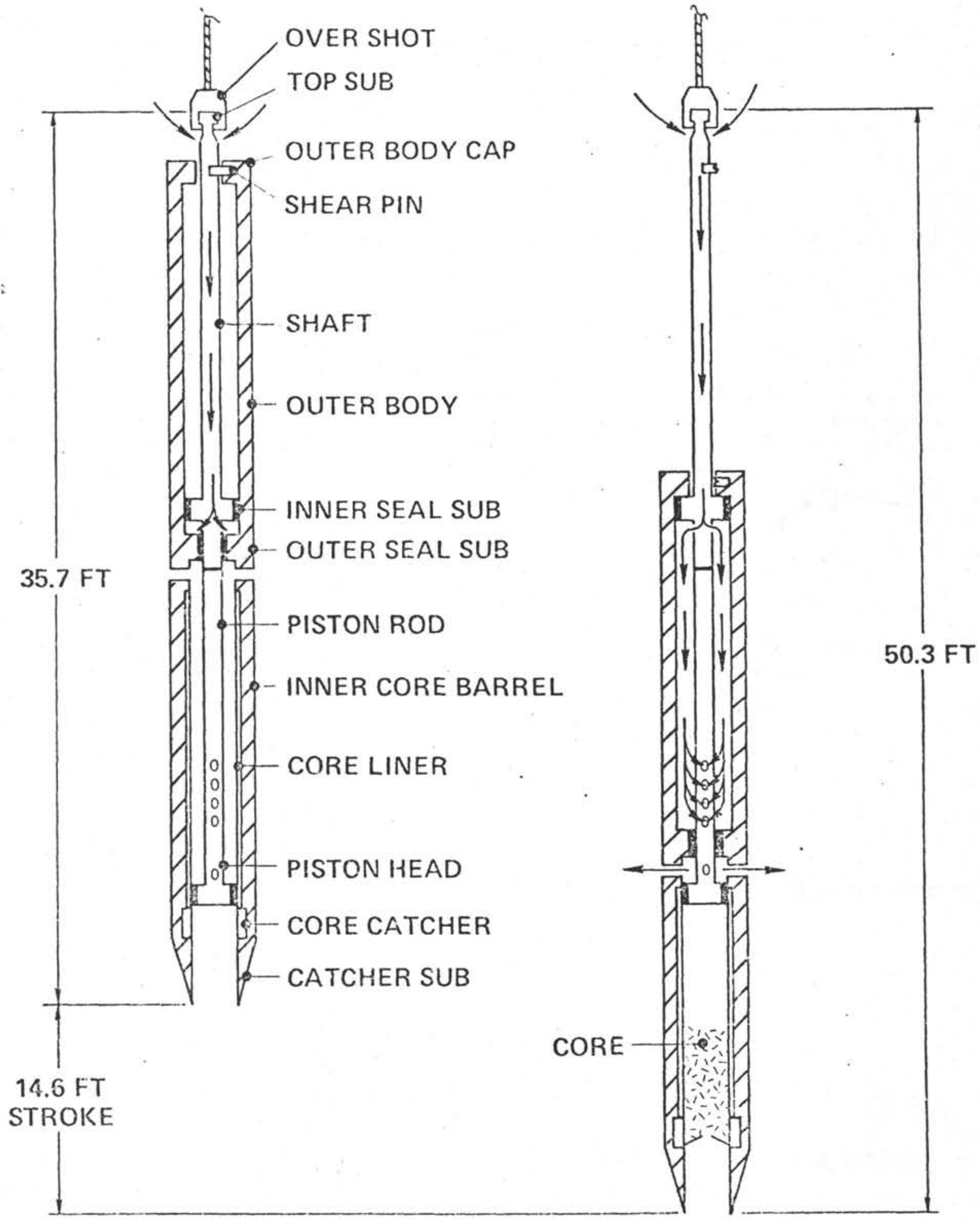

Figure 2

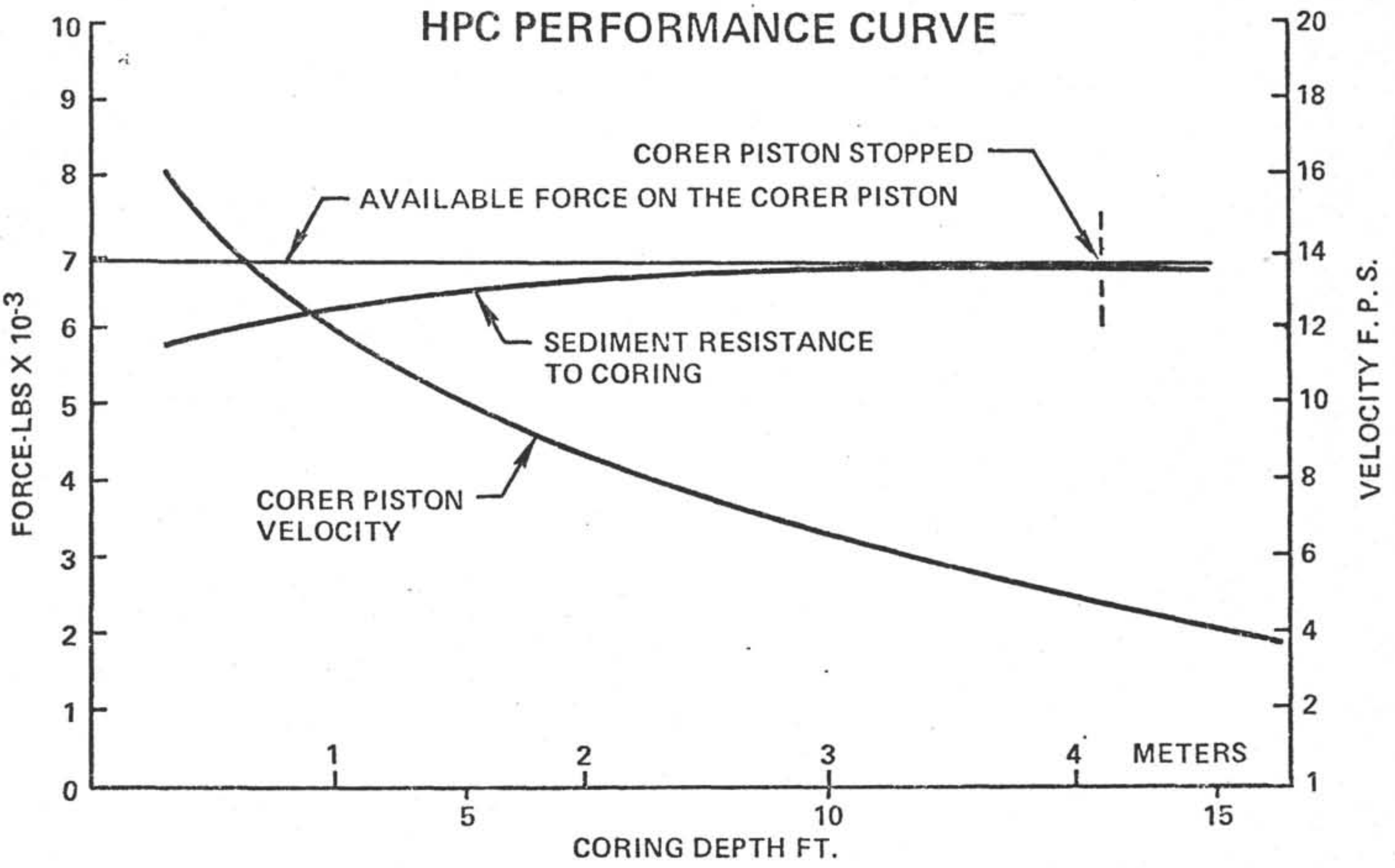
HPC PERFORMANCE CURVE
CORER PISTON STOPPED
AVAILABLE FORCE ON THE CORER PISTON
SEDIMENT RESISTANCE TO CORING
CORER PISTON VELOCITY
FORCE-LBS X 10-3
0
1
2
3
4
5
6
7
8
9
10
VELOCITY F. P. S.
1
2
4
6
8
10
12
14
16
18
20
1
2
3
4
METERS
5
10
15
CORING DEPTH FT.

Figure 3

SCALE MODEL LOAD TEST

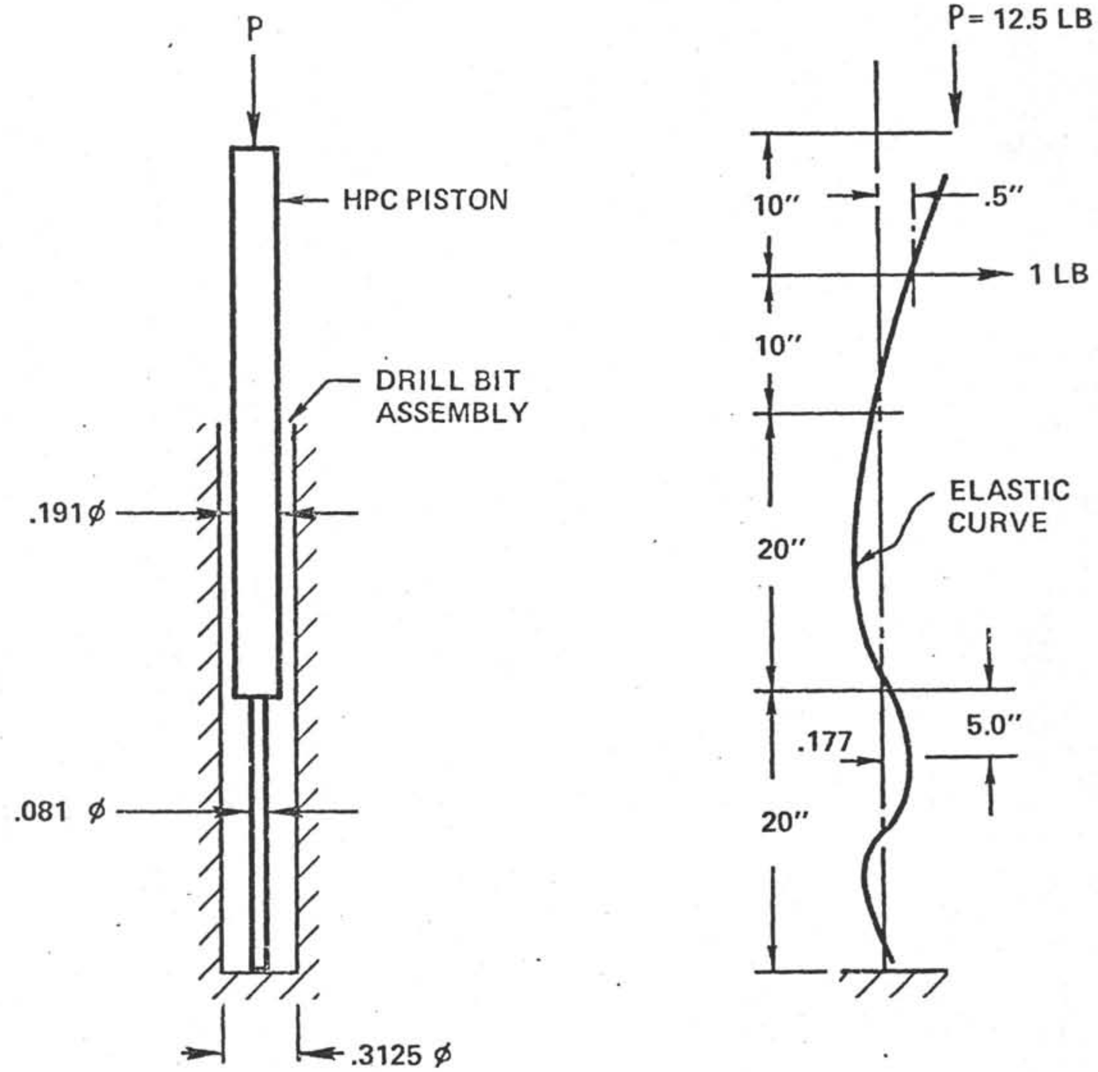

FROUDE SCALING
SCALE FACTOR γ = 11
FORCE FULL SCALE = γ^3 MODEL SCALE
= $12.5\ (11)^3$
AXIAL FORCE = 16,637.5 LB
NO SIDE FORCE

Figure 4

STRESS VS CORER LENGTH

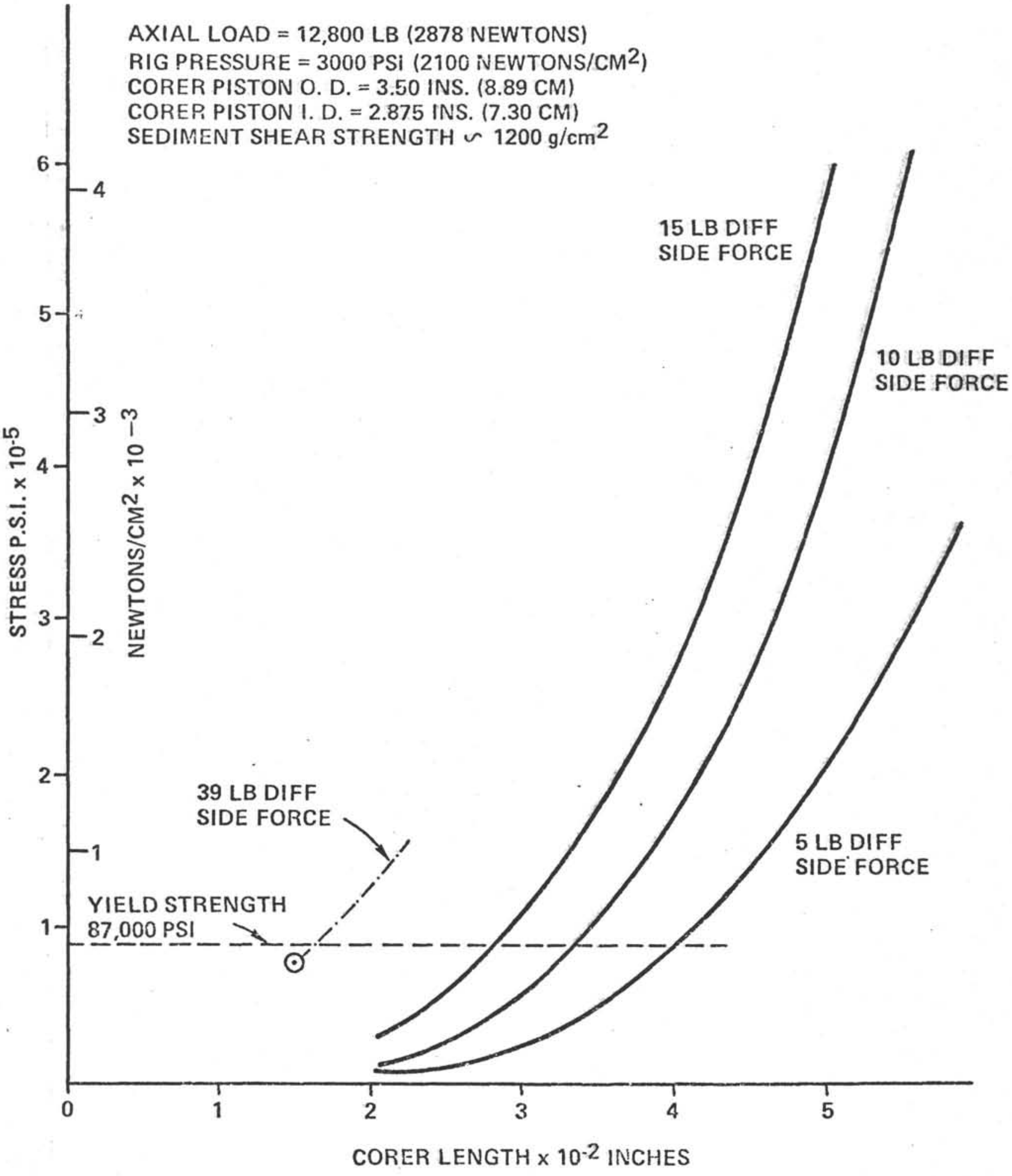

Figure 5

DEEP SEA DRILLING PROJECT
HYDRAULIC PISTON CORER (VLHPC)

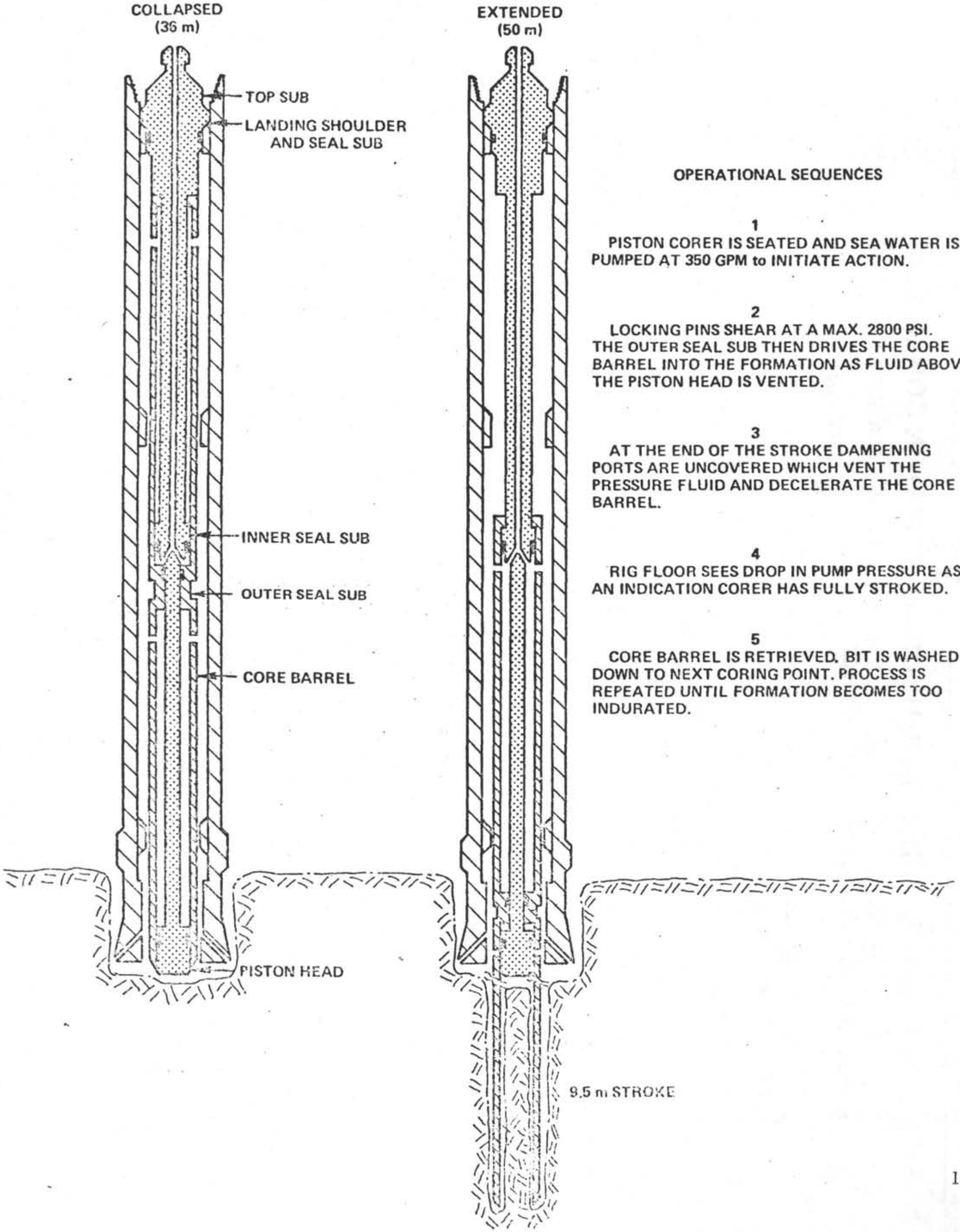

OPERATIONAL SEQUENCES

1
PISTON CORER IS SEATED AND SEA WATER IS PUMPED AT 350 GPM to INITIATE ACTION.

2
LOCKING PINS SHEAR AT A MAX. 2800 PSI. THE OUTER SEAL SUB THEN DRIVES THE CORE BARREL INTO THE FORMATION AS FLUID ABOVE THE PISTON HEAD IS VENTED.

3
AT THE END OF THE STROKE DAMPENING PORTS ARE UNCOVERED WHICH VENT THE PRESSURE FLUID AND DECELERATE THE CORE BARREL.

4
RIG FLOOR SEES DROP IN PUMP PRESSURE AS AN INDICATION CORER HAS FULLY STROKED.

5
CORE BARREL IS RETRIEVED. BIT IS WASHED DOWN TO NEXT CORING POINT. PROCESS IS REPEATED UNTIL FORMATION BECOMES TOO INDURATED.

Figure 6

D. S. D. P. HYDRAULIC PISTON CORER TEST

CHAN 2 MAX = −93   MIN = −2664   MEAN = −956.15   DATA 1−1024   SCALE X 7.0
PRESSURE TRANSDUCER DATA   CLAY BATCH 83

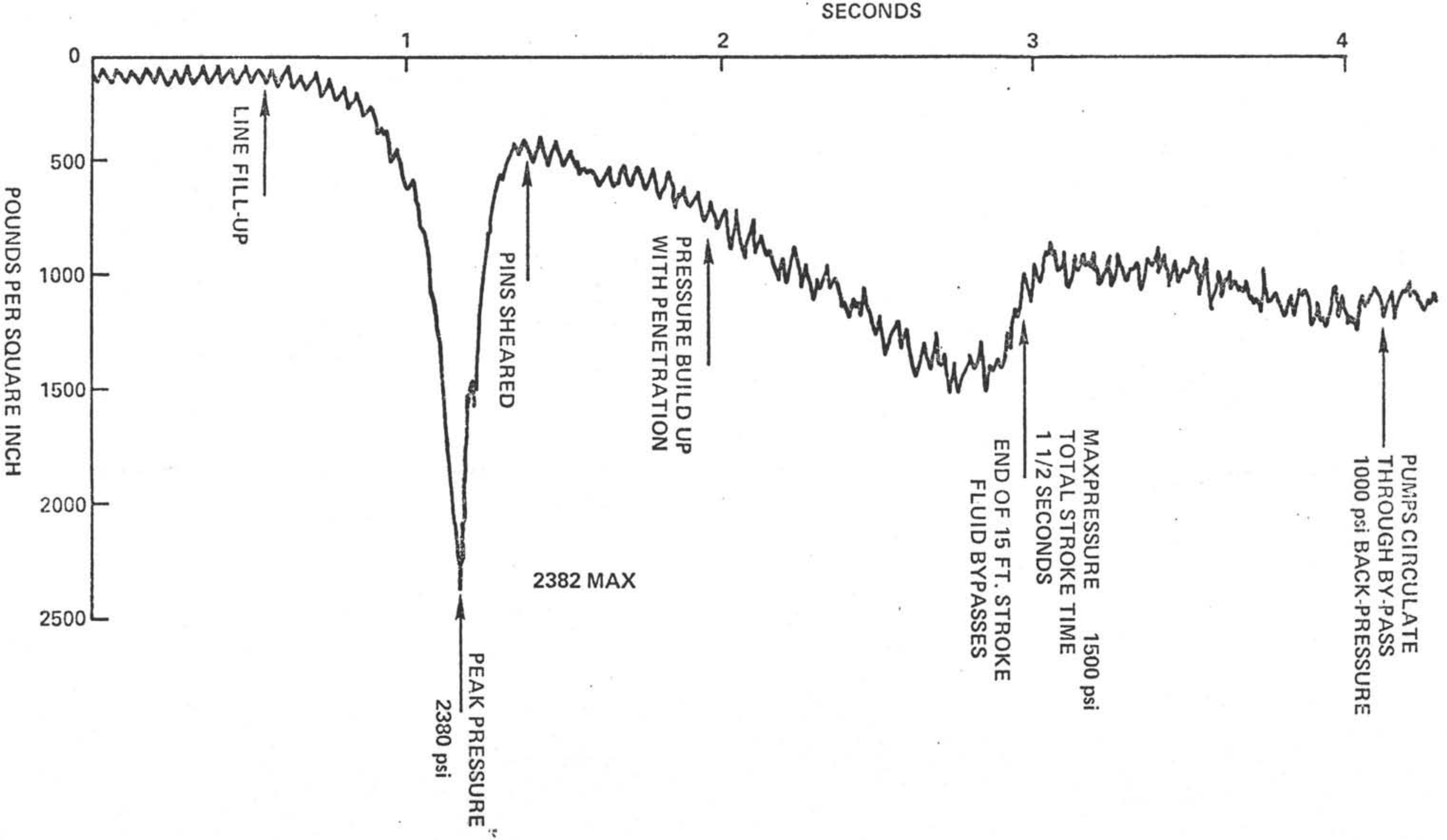

PUMPING UNIT – BJ PACEMAKER
CEMENTING UNIT
MEDIUM CLAY

Figure 7

COMPARISON PHOTOS
ROTARY CORING VS HYDRAULIC PISTON CORING

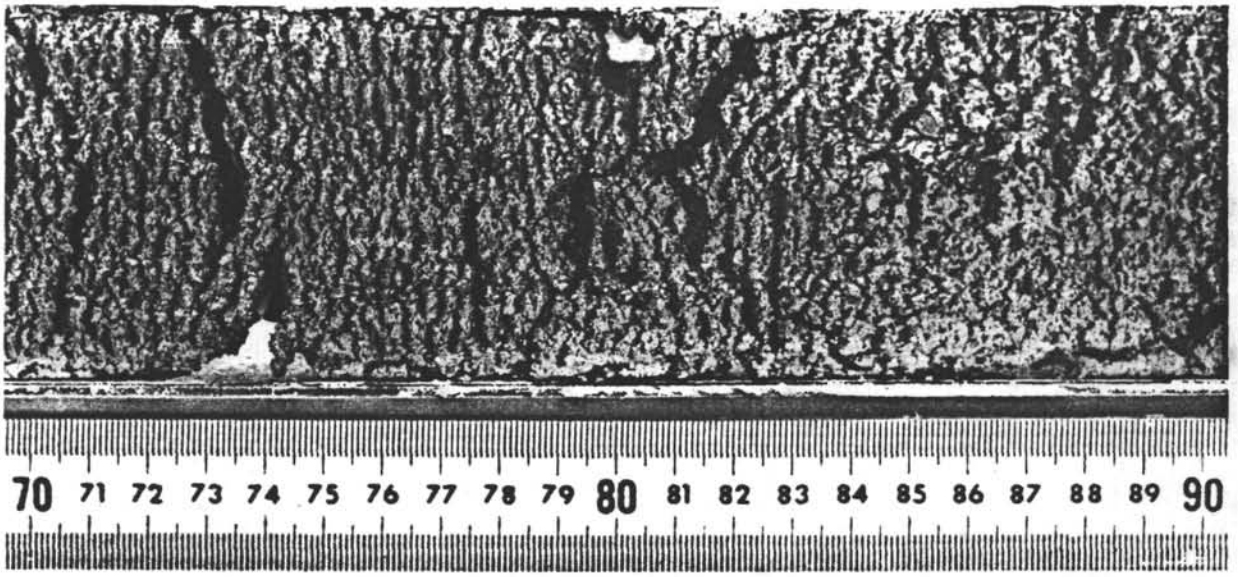

STANDARD ROTARY CORE

HOLE: 479 CORED INTERVAL: 90.0–107.5 m

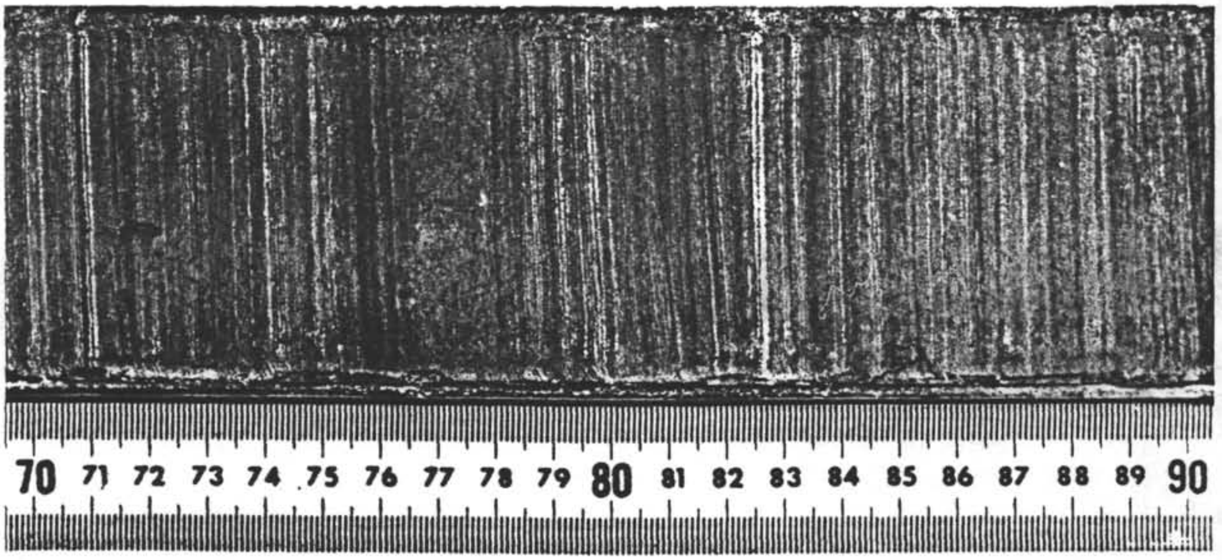

HYDRAULIC PISTON CORE

HOLE: 480 CORED INTERVAL: 95–99.5 m

Figure 8

PREDICTION FOR 9.5 m H. P. C.

BASED ON LEG 68 PERFORMANCE
SHEAR PIN RELASE – 536 Kg/cm^2

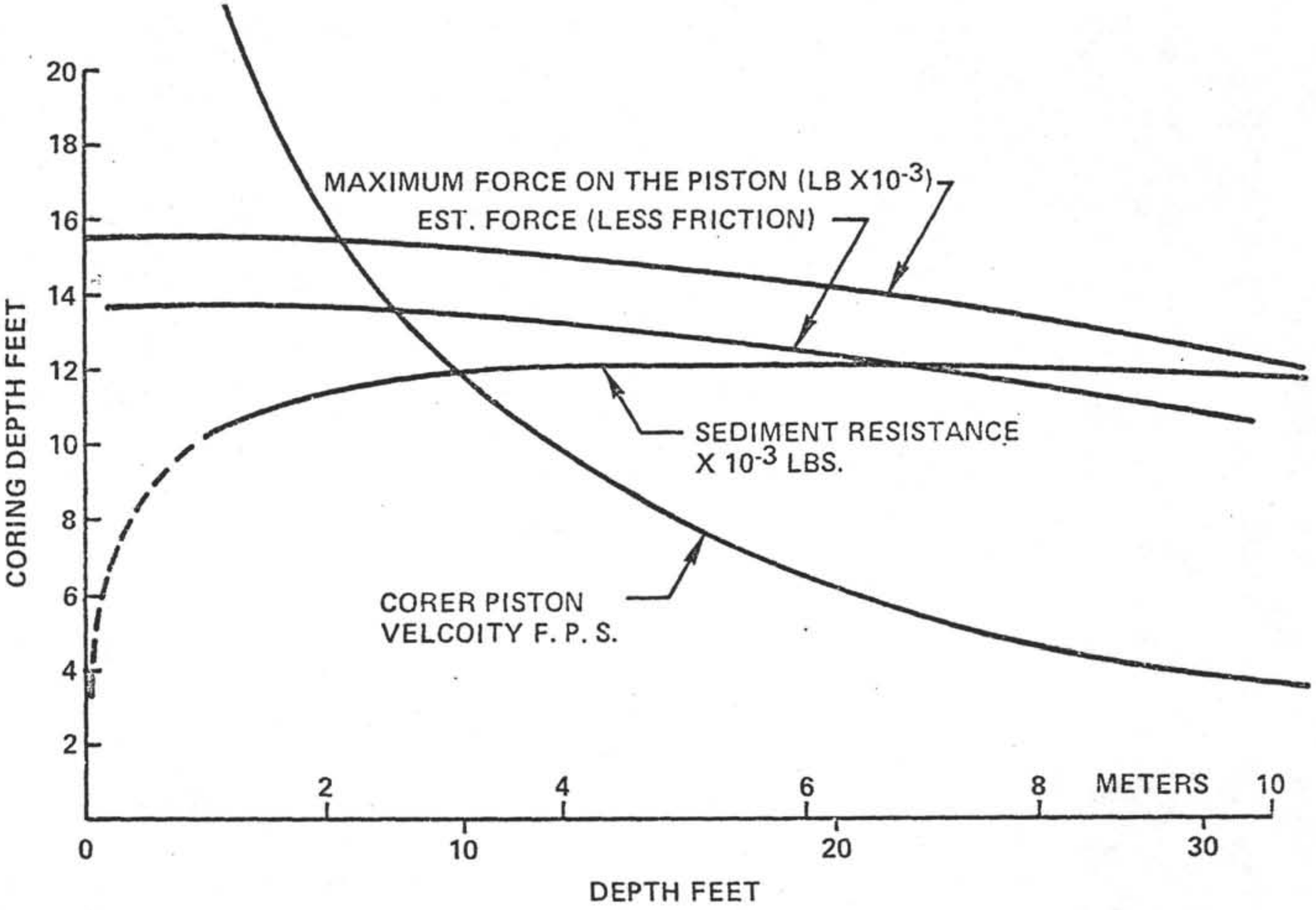

Figure 9

DEEP SEA DRILLING PROJECT
EXTENDED CORE BARREL

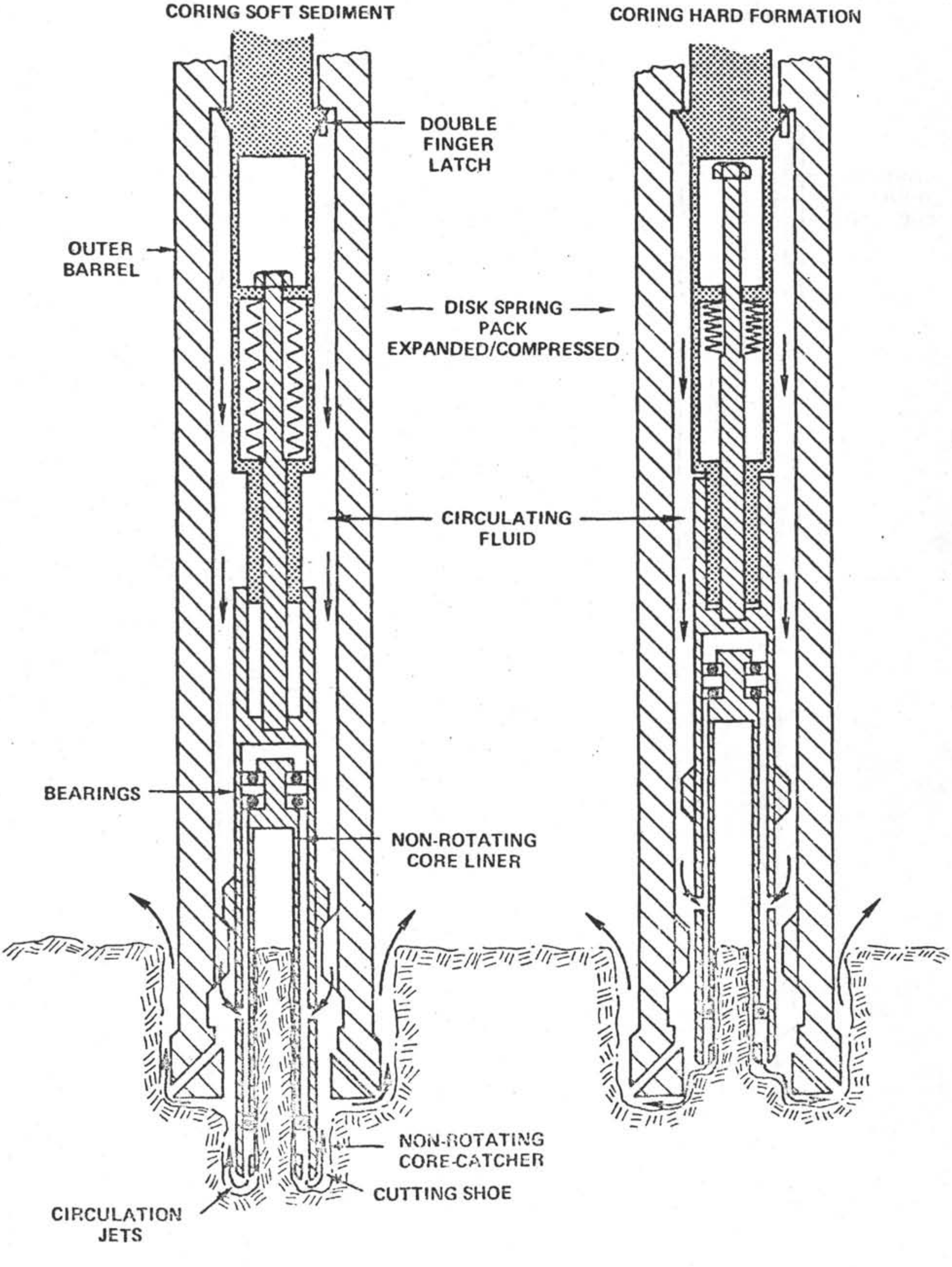

Figure 10

DEEP SEA DRILLING PROJECT

BOTTOM HOLE ASSEMBLY COMPATABILITY
HYDRAULIC PISTON CORER / EXTENDED CORE BARREL

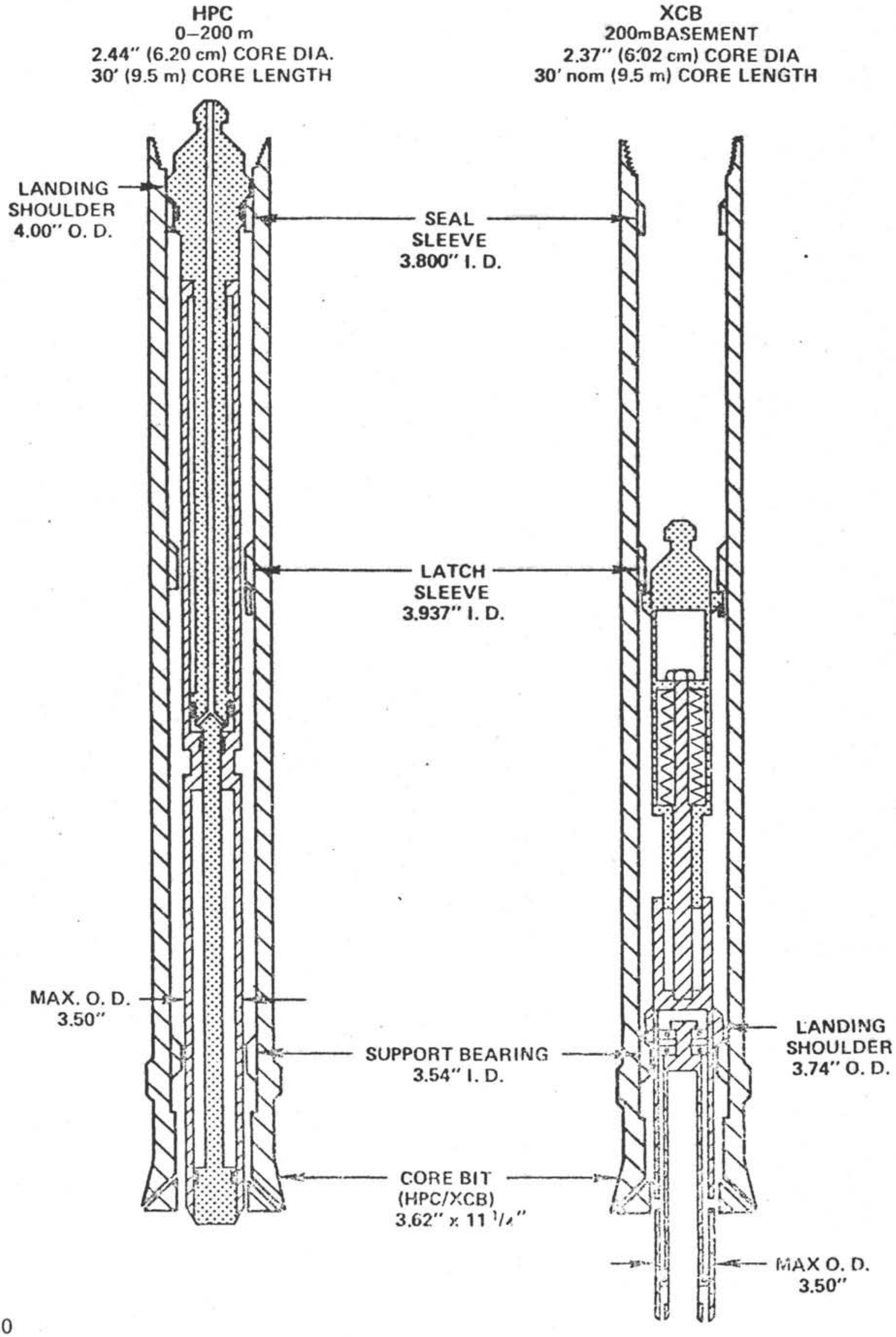

TABLE I

SPECIFICATIONS FOR CLAY PRODUCTS
DSDP PISTON CORE TEST MATERIAL

UCSD Batch No.	J. Clay Batch No.	Bentonite	Material in Pounds			Batch Weight lbs	Initial Penetrometer Reading (clay only)	Force(1) Extract	Piston(2) Pressure Required	Hydraulic(3) Horsepower	K/SF Shear Strength
			Feldspar	Gal	Clay						
1	FB1	96	384	72	--	1080		<400	<73	<11	--
2	FB2	120	480	68	--	1166		400	73	11	.03
3	FB3	144	576	63	--	1245		1100	200	30	.08
4	FB4	168	793	57	--	1435		2200	400	60	.16
5*	B4	Clay	Soft	--	1250	1200	4.25-4.75	3000	545	82	.22
6*	B3	Clay	Soft	--	1250	1200	4.25-7.75	3000	545	82	.22
7*	B2	Clay	Medium	--	1250	1200	6.15-6.5	8000	1455	218	--
8*	B1	Clay	Stiff	--	1250	1200	9.25-9.75	12000	2182	327	.9

* Indicates J. Clay Co. product mix

(1) Excludes weight of barrel estimated at approximately 600 lbs dynamic force during coring likely will exceed steady pull out force; force is 15 ft stroke.

(2) Based on force to extract

(3) Not dynamic, based on 257 GPM (15 ft/sec)

NOTES: Annular piston cylinder volume per 15 ft stroke = 4.3 gal
Each batch yields approximately 12 cu ft.

February 4, 1982

TABLE II

HYDRAULIC PISTON CORE RECORD (LEG 64-79)

DESCRIPTION	64	66	68	69	70	71	72	73	74	75	76	79
Number of Sites	3	1	1	1	4	2	4	6	3	2	2	1
Number of Holes	3	1	7	1	10	2	5	8	5	4	2	1
Number of Cores	43	11	259	54	85	54	118	203	136	230	50	12
Total Meters Cored	204	52	1012	227	325	229	488	1778	586	922	244	39
Total Meters Recovered	155	30	787	175	304	206	413	686	522	816	194	37
Per Cent Recovery	76	58	78	78	94	90	85	88	89	88	79	94
Max Penetration Depth	152	71	235	237	40	151	183	194	286	291	168	39
Max Shear (g/cm^2)	1160	1922	3185	1670	319	99	1577	3418	162	2076	635	--
List of Holes	477B	492	502	504	506	512	515A	519	525B	530B	533	544B
	480		502A		506B	514	516		526	532	534A	
	481		502B		506C		516A	520A	526A	532A		
			592C		506D		517	521	526B	533		
			503		507D		518	521A	528			
			503A		507F			522				
			503B		507H			522A				
					508			523				
					509			524				
					509B							

NOTE: HPC not used on Legs 65, 67, 77, 78,

Shear not measured on Leg 79,

July 1, 1983

TABLE III

VARIABLE LENGTH HYDRAULIC PISTON CORE RECORD (LEG 80-93)

DESCRIPTION	80	81	82	85	86	87	89	90	91	92	93
Number of Sites	2	2	1	4	5	1	1	7	1	6	1
Number of Holes	2	2	1	13	10	3	3	12	3	11	1
Number of Cores	77	42	16	183	11	49	61	358	7	49	11
Total Meters Cored	407	217	132	1292	938	258	546	3,546	53	346	91
Total Meters Recovered	355	216	124	1206	878	174	531	2,812	47	262	90
Per Cent Recovery	87	100	94	93	93	67	97	79	89	75	99
Max Penetration Depth	211	193	132	206	176	152	305	315	70	55	91
Max Shear (g/cm^2)	--	--	--	700	--		--			--	--
List of Holes	548 549A	552A 553B	558A	571 572 572A 572B 572C 573 573A 574 574A 575A 575B 575C	576 576A 576B 577 577A 577B 578 579 579A 580	583 583A 583B 583C	586 586A 586B	587 588 588A 588B 588C 589 590 590A 590B 591 591A 591B 592 593 593A	596 596A 596B	597 597A 598 599 599B 600 600A 600B 600C 601 602A	603C

NOTE: VLHPC not used on Legs 83, 84,88
Shear not measured on HPC cores for Legs 80, 81, 82, 86, 89, 92, 93

HYDRAULIC PISTON CORER (HPC-15)
LEG 64

ABSTRACT

The Hydraulic Piston Corer (HPC) was brought aboard on the evening of December 22, 1978 during a mid-cruise personnel/equipment transfer. Fourteen hours later it had its first test. It was operated a total of 51 times on three sites at depths ranging from 675 meters to 2100 meters. The tool proved fully operational, recovering a near continuous section totaling 152 meters of beautifully laminated, undisturbed cores on Site 480.

The HPC does not need extensive redressing between runs; the turnaround time on deck is about 20 minutes (when no seals have to be changed), using and redressing the same core barrel. After the initial runs, the drill crew handled the entire operation.

The one recurring problem was the frequent destruction of top sub packing. Some modifications are suggested to facilitate operation and handling of the tool.

SUMMARY OF TESTS

Details of each run can be obtained from the notes following the report. The intent of this section is to summarize the results of the tests and the problems encountered at each site.

The Cameron relief valve was not used in the system. On the first site (477B), the blowout was not used. The Saunders line stripper packing was considered adequate to maintain pressure up to 3000 psi. The wiper packing blewout on Run No. 3 when the system overpressurized. The blowout preventer was used from then on.

Once the tool was landed in the head sub, the normal activation procedure was to:

1) Close the blowout preventer.

2) Start pumping at 40 SPM. After about 30 seconds, the pressure in the drill string would begin to rise, first slowly, then quickly as the HPC seated.

3) When the pressure reached 1500-1700 psi, a slight deflection on the gauge would signal the driller that the pins has sheared and he would shut off the pump.

4) The pressure would then drop as it escaped through the vent holes which are open at the end of the HPC stroke.

Site 477B

Water Depth - 2020 M
Number of Runs - 3
Blowout Preventor - Not Used

At this water depth, the HPC was pumped down on the wireline to approximately 300 meters from the bottom, then lowered the rest of the way with the pumps off.

Run No. 1, the tool seated and activated, but the pressure did not drop afterwards. Later, it was discovered that the piston rod was 10 inches too long, thus at the end of its stroke, the vent holes were not aligned on either side of the outer seal sub and the HPC could not vent. Somewhere along the return trip, the lower core barrel section below the double pin sub backed off and was lost downhole. The threads were not damaged so it is assumed that the connection was not made tight enough.

On Run No. 2, the tool did not seat. Assuming that the lower core barrel from the initial run was still in the pipe, the HPC was retrieved and an unsuccessful fishing attempt was made. Then a regular core barrel, the same length as the HPC, was sent down. It seated so the pipe was thought to be clean.

On the third run, the HPC again did not seat. The pump rate was slowly increased to 60 SPM with gradual pressure rise. Suddenly the tool seated, shot off, and the pressure rose to 3000 psi, at which time the line wiper packing blewout.

The HPC was retrieved and found to have recovered four meters of very soft mud (using the spring leaf catcher). In the catcher was an eight-inch piece of the upper liner support from the missing core barrel. It was neatly sheared in half. When the pipe was pulled, the other half of this piece was found in the outer core barrel. It had been splayed out to the shape of the I.D. of the outer core barrel.

Problems Encountered

1) The top sub ring packing was destroyed or lost on each run. It is suspected that they are destroyed as the tool is pulled back up the pipe, and the lips of the seals snag at the pipe joints (a 1000 pound increase in weight was noted each time a joint was passed until the packing was gone). Each time the HPC was retrieved without pumping and at one half the rate of regular core barrel retrieval.

2) The sectioned piston rod, later found to be ten inches too long, was used for all three runs. After the first run, we replaced the 9-3/4" lower sub with a 15" lower sub to keep the piston head from jamming through the core xatchers. But, as stated earlier, this also caused misalignment of the venting holes in the rod.

3) The piston head packing had to be replaced after the second run.

4) After the first run, great care was taken to torque tight the pin sub/core barrel connection. Chain tongs were braced against the standing-off section of drill pipe and a 26" pipe wrench with cheater was used to tighten the connection.

5) After the split locking collar is removed and the cap sub connection is broken, it is still very hard to unscrew the cab sub, since the shaft above the connection cannot be kept straight enough to keep it from binding the cap sub. Therefore, the locking collar was not removed after Run No. 2. Tension was ekpt on the top sub via the tugger while unscrewing the cap sub.

6) The 3/8" set screw locks are too soft. They frequently jam in their hole, making it necessary to use an easy out to back them out.

Site 480

Water Depth - 765 M
Number of Runs - 32
Blowout Preventor - Used

HPC operation on this site was a total success. One hundred fifty two meters of core were drilled with over 90% recovery. The beautifully varved sedimentary sections, ranging from soft mud to very firm diatomacous ooze, were virtually undisturbed.

Prior to this site, the HPC was totally dismantled and redressed. Both the inner and outer sub seals were worn but still good. They were replaced. There were no damaged parts, but the piston rod was corroded. It was sanded, greased, and stowed away. The outer body was swabbed with solvent and greased on the inside. the HPC was reassembled with the one piece piston rod. The head sub landing surface was filed to smooth the rough edges where the metal had "rolled" slightly.

In an attempt to preserve the top sub packing, the six packing rings were oriented such that they faced each other in sets (i.e., the first ring pointing up; the second pointing down; the third pointing up; etc.). The brass ring was situated between the upper four and lower two packing rings.

To test this configuration, the HPC was run 200 meters down pipe, then retrieved. The lower three packing rings were gone. In order to remove the top connector to change the packing, the eight pins had be sheared (it is impossible to pull them out once they are set). The method used is as follows:

1) Lay down the upper section HPC and unscrew the outer body cap to pull the shaft about a foot out of the outer body.

2) With a sledge and a wedge, force the outer body cap away from the top sub to shear the pins.

3) Slide the outer body cap down the shaft to reveal the set screw locking the top sub to the shaft. The rest is easy.

The packing was replaced in the original configuration and the tool run down the pipe. No pumping was needed in this shallow water.

The first two runs had excellent core recoveries, but the packing was lost each time. On the third run, however, all the packing returned intact. The derrickman had been continually reducing the rate of retrieval, and finally found a slow enough speed to preserve the packing (just under 100 m/min). The packing had to be changed, again, after Runs Nos. 12, 20, and 25.

The piston head "V" packing was changed after Run No. 3. They were replaced with polypaks. The polypaks did not inhibit the tool from scoping together during assembly. This packin g had to be changed, again, after Runs Nos. 12, 25, and 27. On Runs Nos. 3, 25, and 27, the core liner had partially collapsed and cracked. This may have caused the damage to the piston head packing.

Runs Nos. 12 and 13, had low recovery. Each of these runs was also characterized by an absence of pressure relief after tool activation. It was suspected that a sandy layer was keeping the HPC from fully extending during actuation. Some sand was recovered on Run No. 13. The driller washed down 4.75 meters in an attempt to get through the sandy section. Also, the inner and outer seals were changed, though after 13 runs, the old ones still looked OK. On the subsequent runs, the recovery increased and the tool actuated normally.

The core liner returned cracked or partially collapsed after Runs Nos. 3, 21, 24, 25, 28 through 32. This may have been caused by the increasing stiffness of the sediment. The recovery was still good. The liners usually collapsed just ahove the lower liner support. The cracks were longitudinal and usually at the upper end of the liner.

Site 481

Water Depth - 2016 M
Number of Runs - 25
Blowout Preventor - Used

Prior to this site, the HPC was totally dismantled and redressed. The outer sub seals were badly damaged. The "V" packing on the inner seal sub was worn but undamaged. The piston rod was corroded. It was sanded and regreased. We had run out of shear pins, so we made more out of 3/16" brass brazing rod. They worked very well, shearing at a slightly higher pressure 1700-1900 psi).

On this site, the HPC was pumped down (as it was on Site 477B). The first two runs were water cores. The recovery was good on the next three runs. On the sixth run, the recovery dropped to 1.7 meters; the eighth and ninth runs produced zero recovery. Starting with Run No. 5, the pressure did not drop quickly after the pins sheared. The pressure would build up to 2000 psi, but no deflection registered on the pressure gauge. The driller said there was no evidence of a hard or sandy layer. Suspecting that the inner or outer seals were leaking, the HPC was overhauled. Seals were undamaged.

Runs Nos. 9 and 10, attempted to recore lost intervals from the two previous runs. No recovery on Run No. 9, and 0.2 meters was recovered on Run No. 10. Recovery picked up to 4.57 meters with Run No. 11. On Run No. 12, the HPC came back with pins unsheared. Runs 13 through 16 had good recovery.

The blowout preventer, which had been in use since the beginning of Site 480, was by this time leaking badly (there was no spare packing). This may have had an effect on the driving force behind the HPC as it sheared, thus inhibiting complete extention and proper venting.

The top sub packing had to be changed after Runs Nos. 4 and 14.

CONCLUSIONS

The HPC was an operational and scientific success.

Advantages

1) Good recovery of undisturbed sediments.

2) Relatively fast turnaround time on deck.

3) No major tool damage or breakdowns after extensive use.

4) Entire operation can be handled by rig crew.

Disadvantages

1) The necessity of using a special large diameter drill bit and head sub for HPC coring requires tripping the pipe to change the bottom hole assembly when piston cores are desired.

2) Top sub ring packing lasts from two to ten runs before becoming lost or damaged. The HPC is retrieved at a very slow speed in order to save the packing. In deep water holes this will be time consuming.

3) When making up the double pin sub/cab sub connection (the lower core barrel section is hung off in the pipe, and the upper HPC section is on the tugger line), a rig hand has to ride up on the harness to hold the shaft straight to keep from binding the threads. This is dangerous when the ship is rolling. If the shaft swings out of his grasp, it can swing back and smash him against the drill pipe.

Suggestions

1. Changing shear pins was the most time consuming phase of the turnaround routine. The pins should be made stronger to reduce the number needed. Also, threaded shear pins should be considered. They would eliminate the necessity of lining up the outer body cap with the shear groove to punch out the used stubs. Eliminating the set screw backers would mean less small parts to keep track of during turnaround operation.

2) Several ratchet drive allen keys and a set of easy outs should be purchased. Also need spares for all of the special assembly tools (i.e., handling clamp, special spanner wrench for outer seal sub).

3) Need a reciprocating seal for the top sub.

4) Several spare upper liner supports should be on hand. These damage easily with rough handling on rig floor.

5) Consider machining pin thread at one end of outer body. This would facilitate installation of inner seal sub without damaging seals. An additional double box sub could be used to make the connection.

6) Use the "V" packing only on the inner seal sub. The piston head works fine with polypak packing. Polypaks were tried on the inner seal sub when the "V" packing spares were depleted, but the increased friction makes it very hard to scope the tool together during assembly.

7) Fabricate a special support plate to hang shaft in pipe so the top sub can be removed to change packing without having to lay down the upper section of the HPC. The existing shear pin groove could be used to hang the shaft, or a new groove could be cut about one foor from the top of the shaft.

8) A method should be devised to keep shaft from binding when the double pin sub/cab sub connection is made up or broken when the HPC is hung off in the pipe.

Don Cameron

Don Cameron

APPENDICES

APPENDIX A

HYDRAULIC PISTON CORER.

ANALYSIS

CONTENTS

Topics

Giant Piston Corer Comparison

Sediment Resistance to Coring

Shore Test Results of H.P.C. penetrating sediment.

H.P.C. coring velocity and resistance to penetration prediction and comparison with operational results.

Development of empirical approaches for H.P.C. performance in varying sediment shear strength and compaction.

Prepared by. Wil Nugent
Wilfred Nugent.

SUBJECT: Hydraulic Corer
SECTION:
ENGINEER: W. Nugent
CHECKER:

W. NUGENT
3736 GAYLE STREET
SAN DIEGO, CA 92115

MODEL:
PAGE:
REPORT:
DATE: May 26 1978

1.0 Problem Statement

During Deep Sea Drilling operations there is a need to take undisturbed core samples from the drilling site. The design of the coring tool 30 ft. long compatible with the drill string, is to be hydraulically actuated by sea water pumped at a pressure of 2500 psi and with a flow rate of 350 gpm; thus pressurizing the drill string and acting on the corer tool piston. Figure 1. presents the details.

1.1 Objectives.

The objectives of the analyses is to:

(a) Predict the velocities, column loads and criteria for the corer tool when penetrating the sub-surface to depths of 100m.
(b) Determine the structural adequacy of the corer tool.
(c) Predict the end of stroke snubbing and recommend devices
(d) Develop shear pin positioning / latching devices.
(e) Predict the load to be reacted by the tension rod.

2.0 Work Done.

1) A review of the Giant Piston Corer (GPC) test conducted by the University of Hawaii.
2) Review of the sub-surface foundation material densities and shear strength. Reference DSDP Technical Report No 9 September 1976

3) Predict friction coefficients for sub-surface materials entrained into the the corer tool at various velocities consistent with the surface pump capacity.
4) Develop mechanization schemes in support of the corer tool design
5) Prepare hydraulic analysis to determine orifice sizes, diametral clearances to ensure an out flow compatible with the pump inflow
6) Analyze and recommend snubbing devices.
7) Conduct structural analysis of critical components.

3.0 Discussion

The GPC tests (University of Hawaii letter) provided velocity, acceleration, and depth of penetration data. With knowledge of the mass of each GPC test, the force developed during corer penetration was calculated. Data from Plates 15 and 18 of DSDP Technical Report no 9 provided soil shear strength, and density values at comparable depths of penetration. An estimate of the sub-surface material viscosity was made, and friction coefficients were developed using the Reynolds Number of a plate simulating the circumference of the pipe. This approach yielded loads and velocities for the hydraulic coring tool which show favourable comparison with the GPC tests.

The resistance (drag) of the material passing through the pipe was calculated by the expression $R = \frac{1}{2} \rho V^2 f$ per foot penetration. The resistance in terms of V^2 was used in the equation $V = \frac{C_d a}{A^{3/2}} \left(\frac{2g}{\gamma} \right)^{1/2} \left[F - (\mu F + R) \right]^{1/2}$ to determine the corer piston velocity as a function of the orifice characteristics.

The procedure yields velocities with reasonable accuracy.

The loads predicted for the hydraulic corer appear to be 12 per cent higher than anticipated when compared to the GPC data.

4.0 Conclusions.

1) Coring operations 0 to 50 feet below the surface are predicted as follows:

Depth of Penetration Ft.	Column Stress psi	30 Ft.Column Buckling Stress psi	Deflection 30 Ft. Column ins	Safety Margin
15	1353	2831	1.67	2.08
20	1739	2831	2.17	1.63
25	2077	2831	2.55	1.36
30	2406	2831	3.00	1.17
*30 at 100m.	2602	2831	3.25	1.08

Taking cores greater than 25 ft. in length with the 3.5 inch diameter barrel is not recommended prior to full scale test.Figure 2 presents a plot of the column stress, corer end load, and penetration velocity versus penetration depth.

2) Coring at 100 m. is accomplished by limiting the surface pump pressure to 1000psi and 200 gpm.

3) Orifice Characteristics. 2- 0.5 inch diameter orifices below the corer piston, Refer to Figure 1. provide fluid flow out from the core chamber at 410 gpm. This added flow compensates for the release of additional fluid stored during pressurization of the drill string. A diametral clearance not less than .028 inches is required to disharge the fluid from the top side of the corer barrel. Refer to Figure 1.

4) Snubbing is provided by a double stack of Bellville washers .19 thickness (a total of 20) to dissipate 2255 ft lbs which results in 40,000 lb/inch^2 to be reacted by the tension rod.

5) Shear Pin(s) are provided to retain the corer barrel in the lock-shut position during deployment, and to be released under 2000 psi pump pressure
A 0.37 inch diameter single pin is required.
Two pi's having 0.213 inch diamer are required as alternatives to one pin. The material 4130 steel HT F_{tu} 125,000 psi with a yield value 109,000 psi is required.

HYDRAULIC PISTON CORER TOOL

FIGURE 1

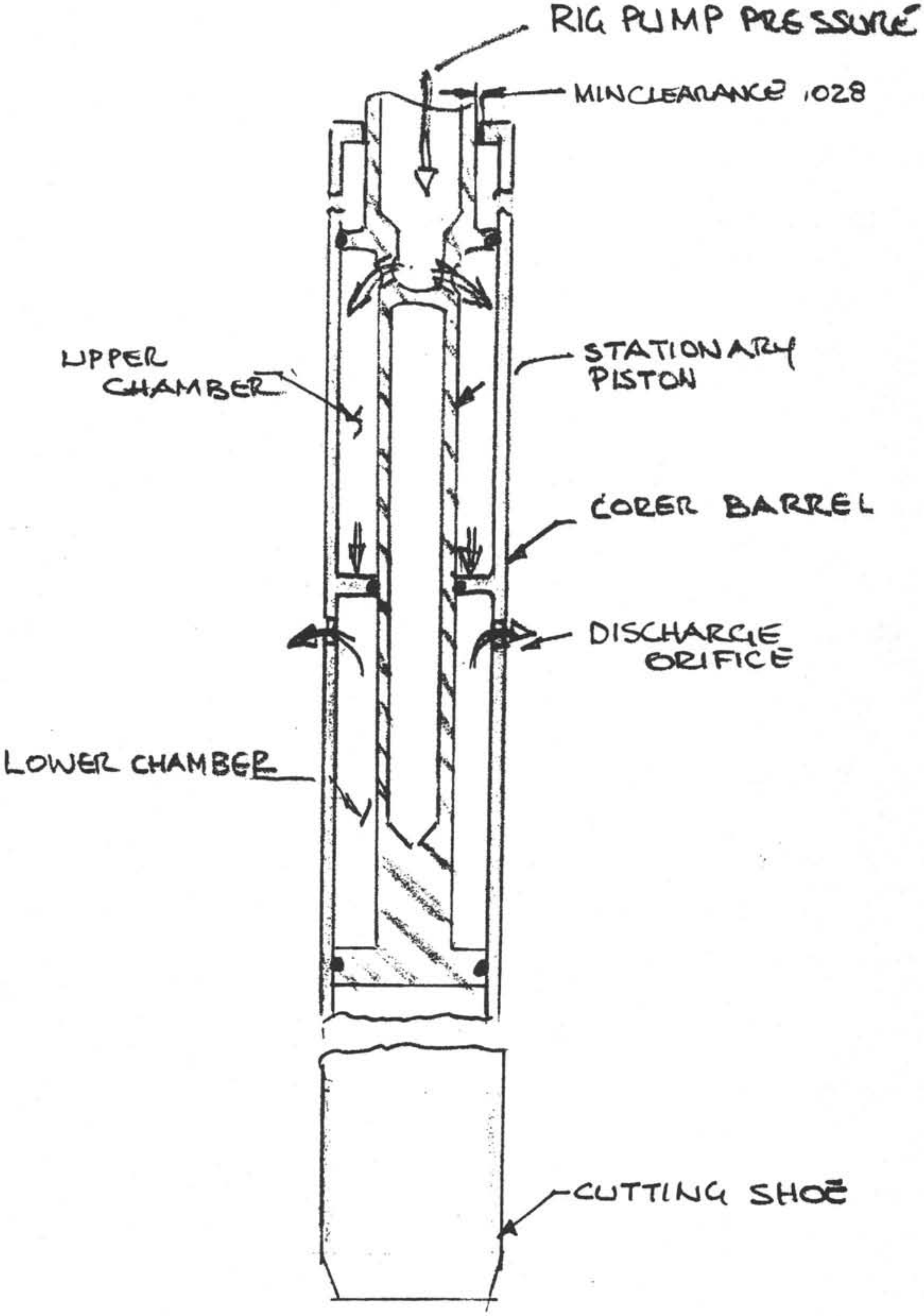

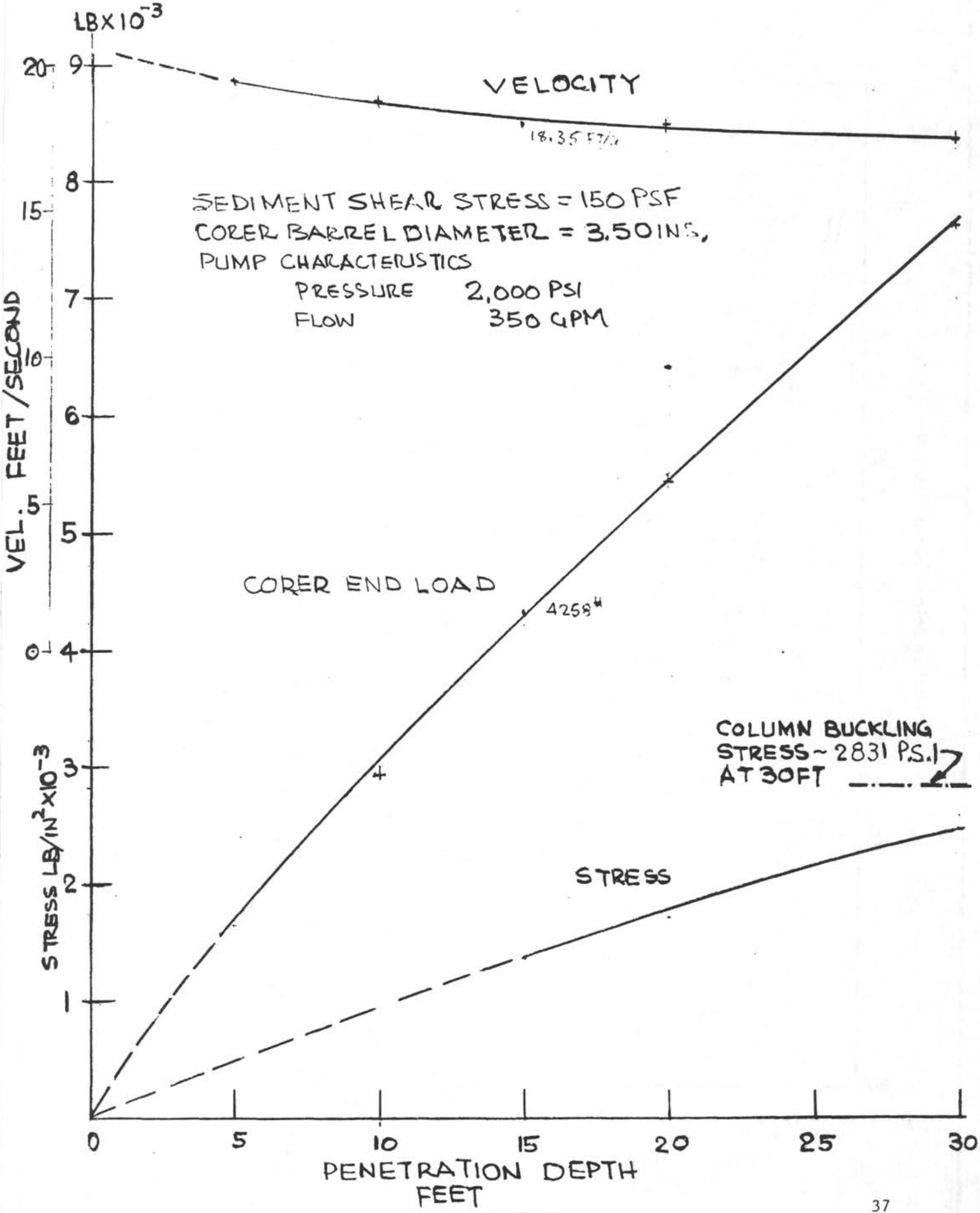
LBX10^{-3}
20
15
10
5
0
9
8
7
6
5
4
3
2
1
VEL. FEET/SECOND
STRESS LB/IN^{2}X10^{-3}
VELOCITY
18.35 FT/S
SEDIMENT SHEAR STRESS = 150 PSF
CORER BARREL DIAMETER = 3.50 INS.
PUMP CHARACTERISTICS
PRESSURE 2,000 PSI
FLOW 350 GPM
CORER END LOAD
4258#
COLUMN BUCKLING
STRESS ~ 2831 P.S.I
AT 30FT
STRESS
0
5
10
15
20
25
30
PENETRATION DEPTH
FEET

FIGURE 2

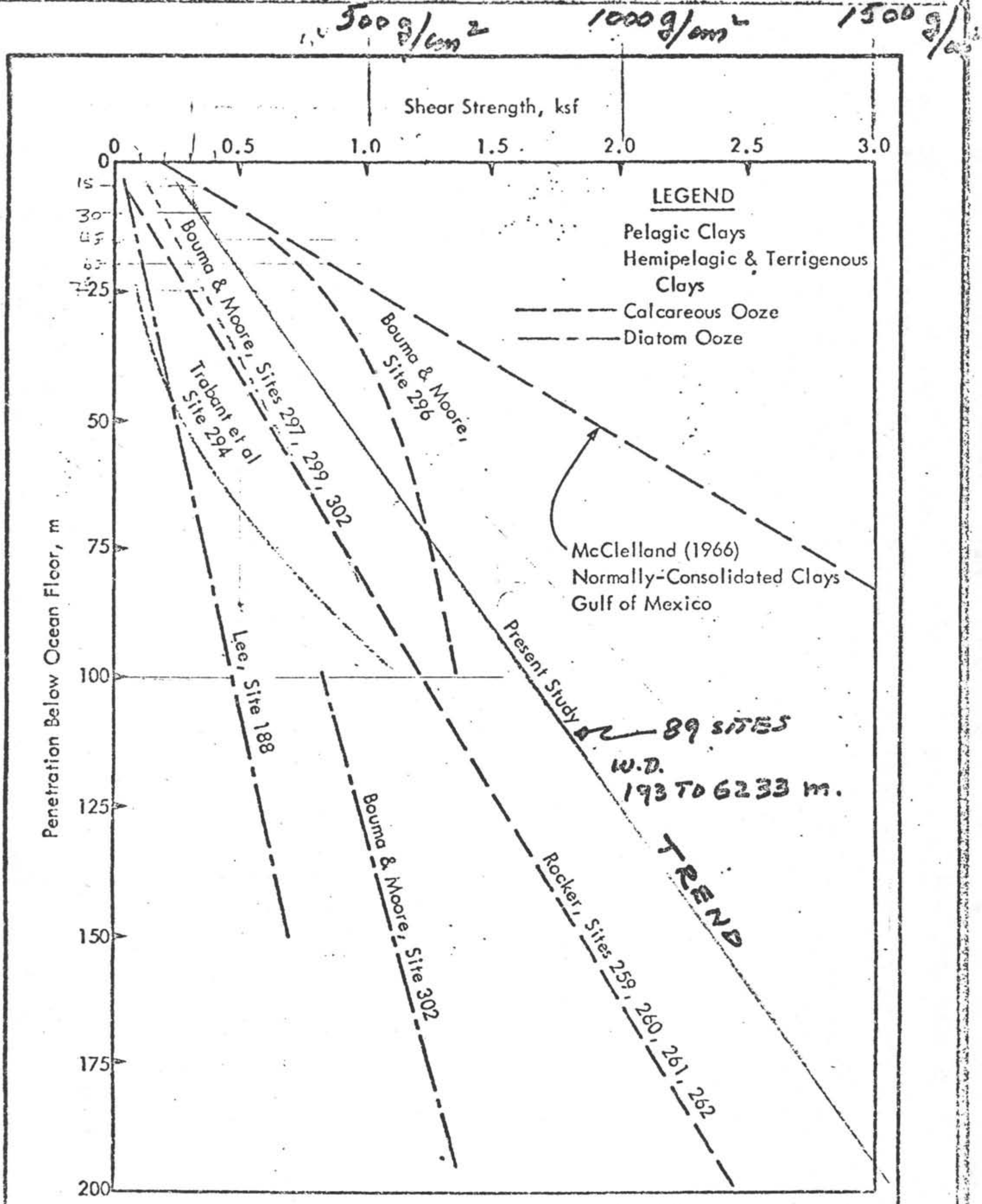

NOTE - MANY MEAS. ON DISTURBED SAMPLES.

SHEAR STRENGTH VERSUS PENETRATION FOR OCEAN SEDIMENTS
FIGURE 3

MAY 26 1978.

COMPARISON OF G.P.C TEST N°4 UNIV. HAWAII
WITH UNIV CALIFORNIA SCRIPPS INST. HYDRAULIC PISTON CORER
PROPOSED CONFIGURATION

HYDRAULIC PISTON CORER CASE I

	DIMENSIONS	AREA IN^2	AREA FT^2
CORER PISTON ANNULUS	(2,88 ID - 1,12 ROD)	5,5	.0382
DRILL COLLAR	4,125	13,364	,0928

VOLUME OF DRILL STRING 18,000 (,0928) 1670.5 FT^3

COMPRESSION OF FRESH WATER ,0065 VOL @ 2000 PSI

THEN $\frac{\Delta V}{V} = .0065$

COMPRESSED VOLUME IN 18000 FT STRING = 10.86 FT^3
INCREMENTAL CORER PISTON LOAD (10,86 × 64.3) = 698,3
INCREASED PISTON PRESSURE 6983/5,5 = 126 PSI
EQUIVALENT WATER COLUMN IN DRILL PIPE = 117 FET

DATA FROM G.P.C. TEST N° 4

DISPL. DEPTH FT	ACCEL(g)	VELOCITY F.P.S	SHEAR STRG MCCLELLAND DATA τ LB/FT^2	$\mu = \tau\left(\frac{dx}{dv}\right)$
10	0.6	18	50	
20	0.8	20	75	
30	1,1	22	114	
40	1,4	18	152	9.45
50	1.6	16	190	

FRICTION ESTIMATE

$$f = 1,328\sqrt{\frac{\mu}{\rho V X}} = 1.328\sqrt{\frac{9.45}{3,85(18)(1.12}} = .463$$

A VALUE OF 18 FEET PER SECOND HAS BEEN USED IN THE ESTIMATE FOR THE AVERAGE PENETRATION VELOCITY.

DYNAMIC PRESSURE (SEDIMENT RESISTANCE TO CORING)

$$D = \tfrac{1}{2}\rho V^2 f \quad \text{P.S.F.}$$

$$= 1.925(.463)V^2 = .892\,V^2 \text{ PSF}$$

SINCE (π DIAM) OF THE PIPE ≈ 12 IN

$D = .892\,V^2$(PSF) = RESISTANCE PER FOOT LENGTH OF PENETRATION

THE FOLLOWING EXPRESSION IS USED TO RELATE THE PENETRATION VELOCITY AND THE RESISTANCE OF THE SEDIMENT TO CORING,

$$V = \frac{C_d a}{A}\left(\frac{2g}{\sigma}\right)^{1/2}\left[\text{RIG PRESSURE} - \text{DYNAMIC IMPACT PRESSURE}\right]^{1/2}$$

$$= \frac{C_d a}{A}\left(\frac{2g}{\cancel{\sigma}}\right)^{\cancel{\frac{1}{2}}=1}\left\{\left[\frac{F-\mu F}{A}\right]^{\frac{1}{2}} - \left[D\,(\text{PSF})\right]^{1/2}\right\}$$

WHERE; V = PISTON VELOCITY FPS (TBD)

A = PISTON ANNULUS AREA = 5.5 IN^2 = (0.0382 FT^2)

σ = SEA WATER DENSITY = 64.3 LB/FT^3

P = HYDRAULIC PRESSURE = 2,000 PSI (288,000 PSF)

F = FORCE ON PISTON = 11,000 (.8) = 8800 LB

μ = COEFFICIENT OF SLIDING FRICTION = 0.2

σ = SEDIMENT MASS DENSITY = 3.85 SLUGS/FT^2

a = ORIFICE AREA = 2-½ IN DIA = 0.00273 FT^2

C_d = ORIFICE DISCHARGE COEFFICIENT = 0.62

Q = VOLUMETRIC DISCHARGE = $.62(.00273)\sqrt{2126(144)} = 0.9365$ FT^3

= 448.83(0.9365) = 420 gpm.

D = RESISTANCE OF THE SEDIMENT (ASSUMED TO BE CONSTANT FOR LIQUIDIC SEDIMENTS IN THE FIRST ORDER ANALYSIS)

THEN FOR 5 FEET PENETRATION

$$V = .04426\left\{\left[230{,}400\right]^{\frac{1}{2}} - \left[5(.892)V^2\right]^{1/2}\right\}$$

$$= 21.24 - .0935\,V$$

$$= \frac{21.24}{1.0935}$$

$$= 19.42 \text{ FT/SEC}$$

THE COLUMN LOAD ON THE **CORER** = $5(.892)V^2$

$= 1682$ LB.

CORING TO 40 FEET PENETRATION

$$V = .04426\left[230{,}400\right]^{1/2} - \left[40(.892)V^2\right]^{1/2}$$

$= 16.8$ FT/SEC

THE COLUMN LOAD **ONTHE CORER** = 10,006. LB.

FIGURE 4 SHOWS A PLOT OF THE DATA GENERATED BY THE FIRST TRIAL ANALYSIS.

THESE DATA WERE COMPARED WITH THE RESULTS OF THE GIANT PISTON CORER TESTS Nos 4 AND 5

* ALLOW ADDED MASS AS THE CORE IS TAKEN

G.P.C DATA

VELOCITY (F.P.S)	20	22	18	16
PENETRATION (FT)	10	20	30	40
ACCELERATION (g)	.8	1.1	1.4	1.6
TOTAL MASS (SLUGS)	141	146	152	157 *
RESISTANCE (LBS)	3632	5171	6852	8095
H.P.C. (CASE)	2990	5450	7640	10006

THE RESULTS OF THE H.P.C. FIRST ORDER ANALYSIS COMPARE FAVORABLY WITH THE RESULTS OF THE GIANT PISTON CORER **RECORED TEST** CONDITIONS.

FIGURE 5 SHOWS THE RESULT OF A TYPICAL SHORE TEST, WHEN THE H.P.C IN THE OPERATIONAL CONFIGURATION WAS "SHOT" INTO A STIFF CLAY MIX ~ 0.9 K/SF.

FIGURE 4

HYDRAULIC PISTON CORER CASE I

SEDIMENT SHEAR STRENGTH = 152 P.S.F
CORER BARREL DIAMETER = 2.88 INCHES I.D.
ORIFICES 2 - 0.5 INCHES DIAMETER

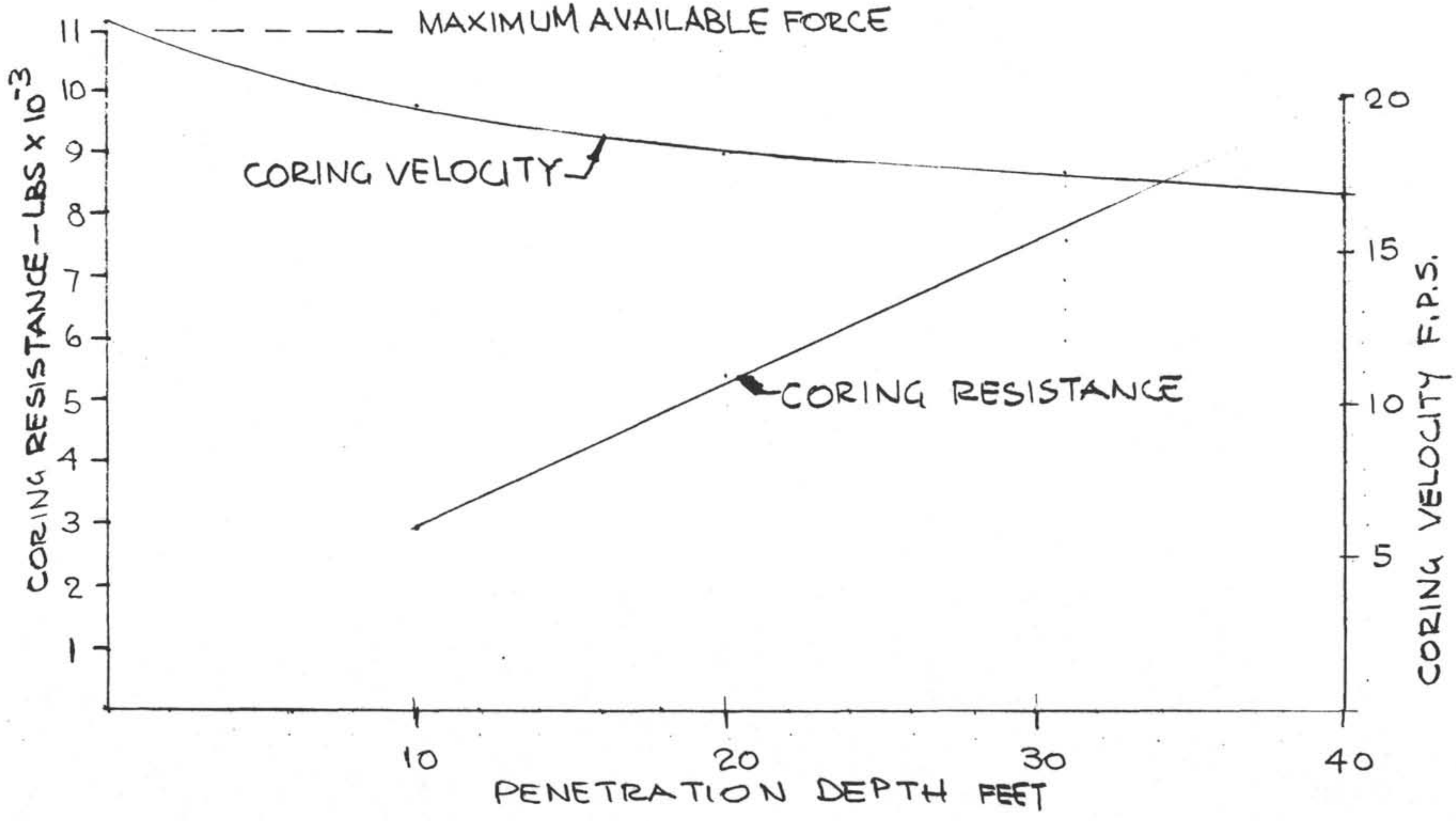

D. S. D. P. HYDRAULIC PISTON CORER TEST

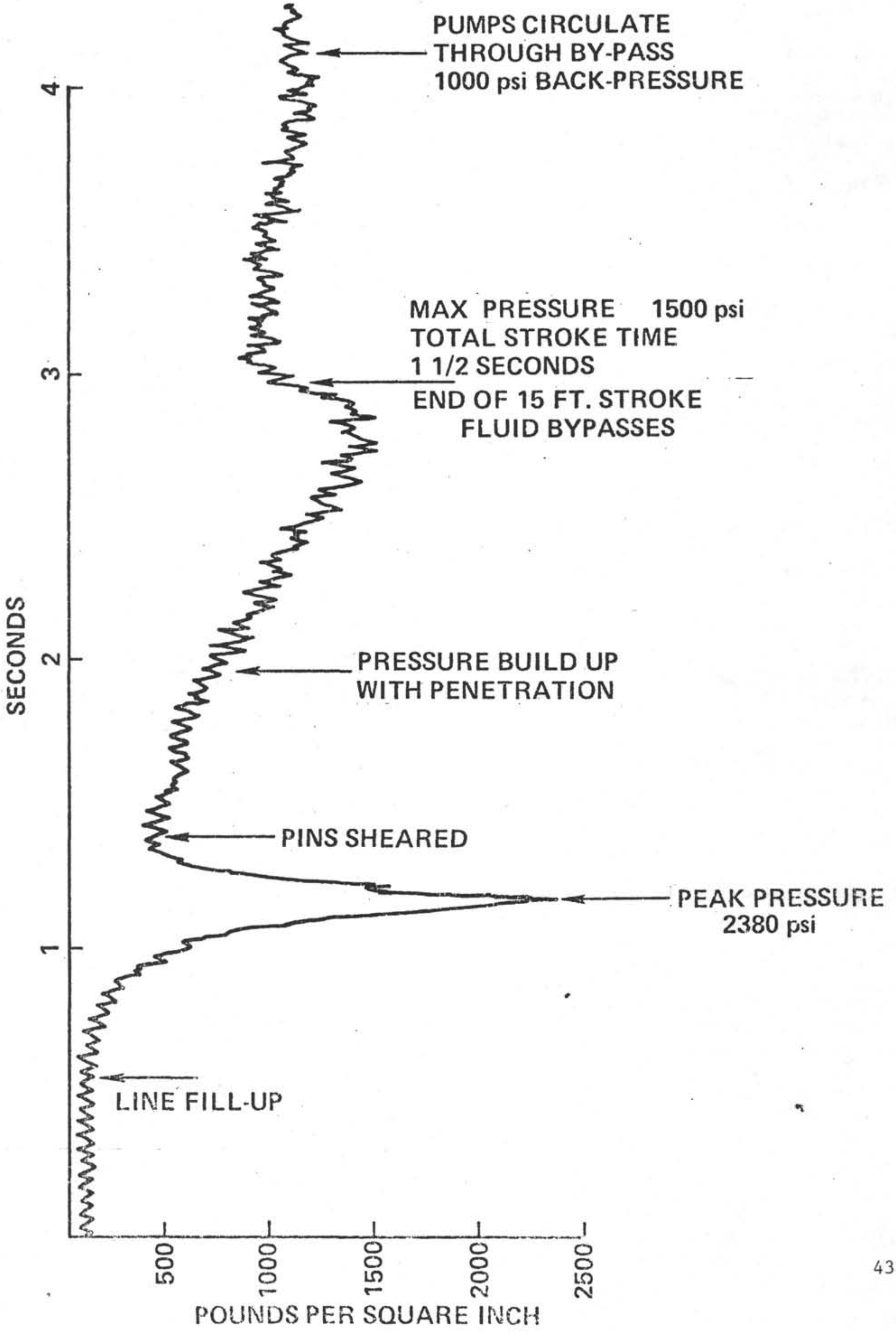

HYDRAULIC PISTON CORER ANALYSIS

Alternative methods for determining the forces and velocities developed during coring were investigated. One suggestion recommended the use of a friction factor in a Darcy Equation of .08 which was extrapolated from test data obtained from evaluating the characteristic of slurry pumped through a continuous loop.

The approach was as follows:

Head loss = Entrance loss + Friction loss

$$h = \left[0.5 + f.(l/d)\right] V^2/2g$$

Nomenclature:

h = Head loss in feet
f = Friction factor
l = Length of pipe in feet
d = Diameter of pipe in feet
V = Velocity of flow (rate of penetration) in feet
Q = Flow rate of circulating fluid in gpm.
g = Gravitation acceleration in feet/ second^2

The flow was assumed to be laminar

The density of the sediment was taken to be 118 lbs/ft^3

$$h = \left[0.5 + 0.08(30/0.24)\right] V^2/64.4$$

From previous shore testing the control of the penetration velocity within the limits of 20 ft/second was achieved. Using this value in the above equation, yields a head loss of 65.22 feet.
Expressing pressure as a function of head loss and density, a value of 7696 lbs/ft^2 is obtained.
Let 7696 lbs/Ft^2 be the corer barrel internal pressure

The friction force on the inner wall = (.753)(30)(7696) = 173,777 Lbs which appears unrealistic, in relation to the test results.
This approach was was abandonded in favor of expression

$$V = \frac{Cda}{A^{3/2}} \left(\frac{2g}{p}\right)^{1/2} \left[\text{Force - Drag}\right]^{1/2}$$

Operational data from leg 68 indicated that full cores were not retrieved repeatedly in sediment with shear stress in excess of 3000 g/cm^2. Figure 5 shows the predicted plot of a data sample. CaseI is the mean of ten trials where partial cores were retrieved. Case II represents a condition where 95% of a full core was retrieved. The curves are defined by the law

$$y = a + b\,x^n$$

HYDRAULIC PISTON CORING

ESTIMATE OF CORING RESISTANCE FROM OPERATIONS REPORT.
LEG No 68

CASE I

MEAN VALUE OF DATA FROM CORES No 37 THROUGH No 47

Mean Sediment Shear Strength	2,666.28	g/cm^2
Mean Corer Release Pressure	2,103	p.s.i.
Mean Length of Core Recovered	2.3114	meters

CASEII

DATA FROM CORE 29

Sediment Shear Strength	1,170	g/cm^2
Corer Release Pressure	1,650	p.s.i.
Length of Core Recovered	4.43	meters

FIGURE 5

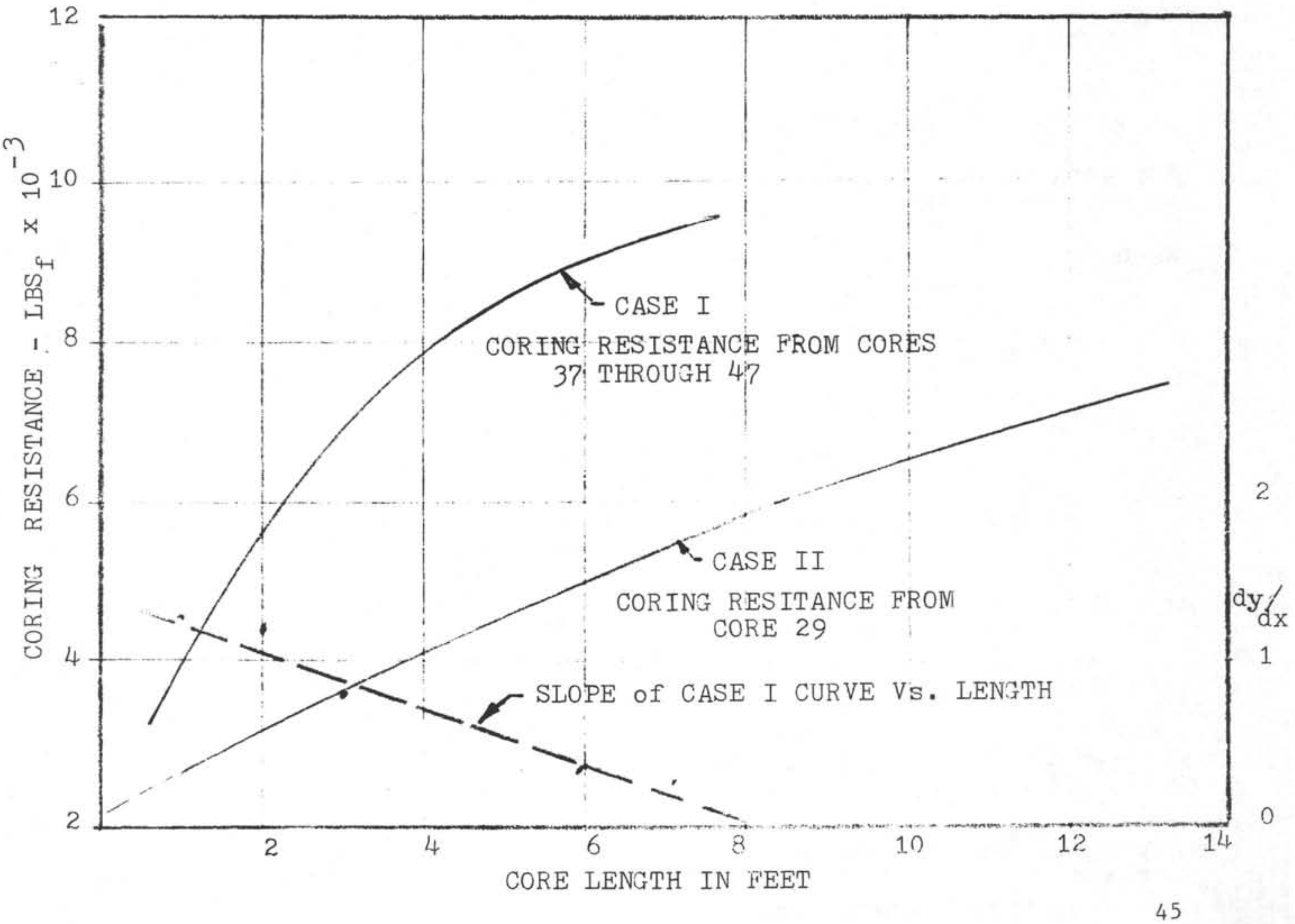

HYDRAULIC PISTON CORER ANALYSIS

Derivation of Coring Depth Exponent

Refer to Case I

When $x = 2, \quad y = 5600 \qquad a + b\,2^n = 5600 \qquad (1)$

$x = 4 \quad y = 7800 \qquad a + b\,4^n = 7800 \qquad (2)$

$x = 8 \quad y = 9600 \qquad a + b\,8^n = 9600 \qquad (3)$

Subtract (1) from(2) $\qquad b\,2^n\,(2^n - 1) = 2200$

(2) from (3) $\qquad b\,2^n\,2^n\,(2^n - 1) = 1800$

$$2^n = \frac{1800}{2200} = .81818$$

$$n = -.2895$$

$$b = \frac{2200}{2^n(2^n-1)} = -14788$$

$$a = 5600 - (-14788 \times 2^{-.2895})$$

$$y = 17700 - 14788\,X^{-.2895}$$

Applying these principles to the ratio of x_1, x_2, x_3, to L the length of core retrieved.

when	x	$\frac{L}{(L-x)}$	
	2	1.225	$a + b\,2^n = 1.225$
	4	1.583	$a + b\,4^n = 1.583$
	8	3.665	$a + b\,8^n = 3.665$

$$2^n = \frac{2.082}{.358} \doteq 5.8156$$

$$n = 2.539$$

$$b = 0.01278$$

$$a = 1.225 - .01278 \times 2^{2.539}$$

$$y = 1.151 + 0.0128\,X^{2.539}$$

A program was compiled to calculate the constants and the exponent for a number of cases. During this process a variable for the effect of sediment shear strength was applied.

HYDRAULIC PISTON CORING.

On Leg 68 10,000 feet of drill string was deployed and pressurized to approximately 3,000 p.s.i. which compressed the water column an equivalent 10 cub. ft. The volume of the corer piston barrel is 0.55 cub. ft. The force on the corer piston is assumed to be constant under these conditions. From shore test results the force available for coring is around 8,500 lb. when friction and orifice control are considered.

The resistance to coring (drag) increased with depth as evidenced from the operations report from Leg 68. An exponent was developed as a depth factor using the expression:

$$y = a + b\,x^n$$

Where x = The coring depth ($x_1 .. x_2 ..$ etc.)

$n = 1.3 + .00044\,\tau$

τ = The sediment shear stress in g/cm^2

a = Constant = 1.3

b = Constant = 0.01

This emperical expression was developed by general determination laws connecting a set of tabular values which yielded a regular curve. The slope of the curve at regular intervals was plotted against the predicted value of the Coring Resistance, to give a straight line. A ratio of L/(L-x) relating the $x_1 .. x_2 ..$ and the total length of core recovered also yielded a straight line plot, which indicated that $y = a + bx^n$ might be used to provide a solution.

A program was compiled and the results of the extreme conditions reported from Leg 68 are shown.

```
Sediment  1170 g/cm2        Sediment  2666 g/cm2

Core      14.9 length       Core  10.864 length
            2.                       2.

SOLVE FOR        N          SOLVE FOR        N
 .2119337174                 .3571188138
 .7924478128                 2.210545507
 3.739130435                 6.189944134
 1.902702799         N       2.629926089         N
SOLVE FOR        B          SOLVE FOR        B
 .0206926793         B       .0111163780         B
SOLVE FOR        A          SOLVE FOR        A
 1.232411387                  1.2944153
 1.232411387                  1.2944153
```

HYDRAULIC PISTON CORING

Background,

Designs for the Hydraulic Piston Corer (HPC.) were completed in 1978. The performance was predicted on the basis of controlling the penetration velocity between the limits of 20Ft./sec and 10Ft./sec. The available shipboard rig pump pressure and flow were 2500 psi. and 350 gpm respectively.

An expression $V = \frac{C_d a}{A^{3/2}} \left(\frac{2g}{\rho}\right)^{1/2} \left[\text{Piston Force - Sediment Drag}\right]^{1/2}$

was used as an initial analytical tool.

Laboratory testing in a deep hole with a uniform sediment showed good co relation between the analysis and test.
Operation in stiffer sediments indicated that the resistance to penetration increased exponentially with depth. A second "lump" factor in addition to the drag coefficient was developed by evaluating the operational data, as previously discussed.

The drag values were based on an apparent viscosity, applicable for Ooze and unlithifide sediment, the terms used were:

$$\mu = \tau \left(\frac{dx}{dv}\right)$$

Where τ = Sediment shear strength
dx = the distance between surfaces
dv = the velocity change
μ = viscosity

Substituting these terms in a friction equation where σ = Sediment density slug ft^2

$$f = 1.328 \sqrt{\frac{\mu}{V(x)\sigma}}$$

$$f = 1.328 \; (\tau / V^2 \sigma)^{\frac{1}{2}}$$

is obtained

Relating the friction to Hydrodynamic Drag by $D = \frac{1}{2} \sigma V^2 f S$ where S is the surface area. A step function analysis was developed which considered each foot of corer penetration and the circumference of the barrel as a unit area. (3.5π) x each foot of penetration allows the S term to be neglected numerically.

The drag term can be written $\frac{1}{2} (\sigma) V^2 \quad 1.328 (\tau / V^2 \sigma)^{\frac{1}{2}}$

which reduces to $D = 0.664 (\tau\sigma)^{\frac{1}{2}} (V)$

then $V = \frac{C_d a}{A^{3/2}} \left[\text{Piston Force} - 0.664 (\tau \sigma)^{\frac{1}{2}} (V) (D)^{\exp}\right]^{\frac{1}{2}}$

which is solved as a quadratic in the form of

$$\underset{\text{Orifice Parameter}}{aV^2} + \underset{\text{Drag constant}}{bV} - \underset{\text{Piston Force}}{C} = 0$$

Figures 6and 7 are analytical solutions which compare with the results obtained during actual coring operations.

HYDRAULIC PISTON CORER ANALYSIS

NUMERICAL EXAMPLE PREDICTING THE VALUES FOR VELOCITY AND RESISTANCE

CONDITIONS

P = Shipboard Rig Operating Pressure 2,000 psi.
A = Annulus Area of the Corer Piston 5.5" ($.0382\ ft^2$)
a = Orifice Area 2-½inch diameter ($.00273 ft^2$)
C_d = Orifice Discharge Coefficient .62 non dimentional
= Sediment Shear Stress 2,400 psf.
= Sediment Mass Density 3.65 slugs/ ft^2

The Sediment Resitance = $.664(2400 \times 3.65)^{\frac{1}{2}}\ (V) = 61.7V$

Then $$V = \frac{.00273\ (.62)}{(.0382)^{3/2}}(11000 - 67.7V)^{\frac{1}{2}}$$

$$= .2265\ (11000 - 67.7V)^{\frac{1}{2}}$$

$$19.49\ V^2 = 11000 - 67.7V$$

Solution of the quadratic by completion of the square

$$19.49\ (V^2 + 3.47V - 564.32) = 0$$

$$V^2 + 3.47V + (1.737)^2 = 564.32 + (1.737)^2$$

$$V + 1.737 = 23.81$$

<u>After one foot penetration</u> $V = 22.08$ ft/second

The Sediment Resistance to Coring for the first foot depth = $67.7(22.08)$
= 1494.81 lbs.

At a Coring Depth of 10 feet n = $1.3 + (.00044 \times 1200) = 1.828$
Exponent y = $1.3 + .01\ (10)$ exp 1.828
= 1.973

The Sediment Resistance to Coring = $67.7 \times 10^{1.973}(V)$

$$19.49\ (V^2 + 326V - 564) = 0$$

$$V + 163.2 = 164.9$$

<u>At 10 Feet penetration</u> $V = 1.7$ Feet/ Second

The Sediment Resistance to Coring = 10,939 Lbs.

HYDRAULIC PISTON CORER - FIGURE 6

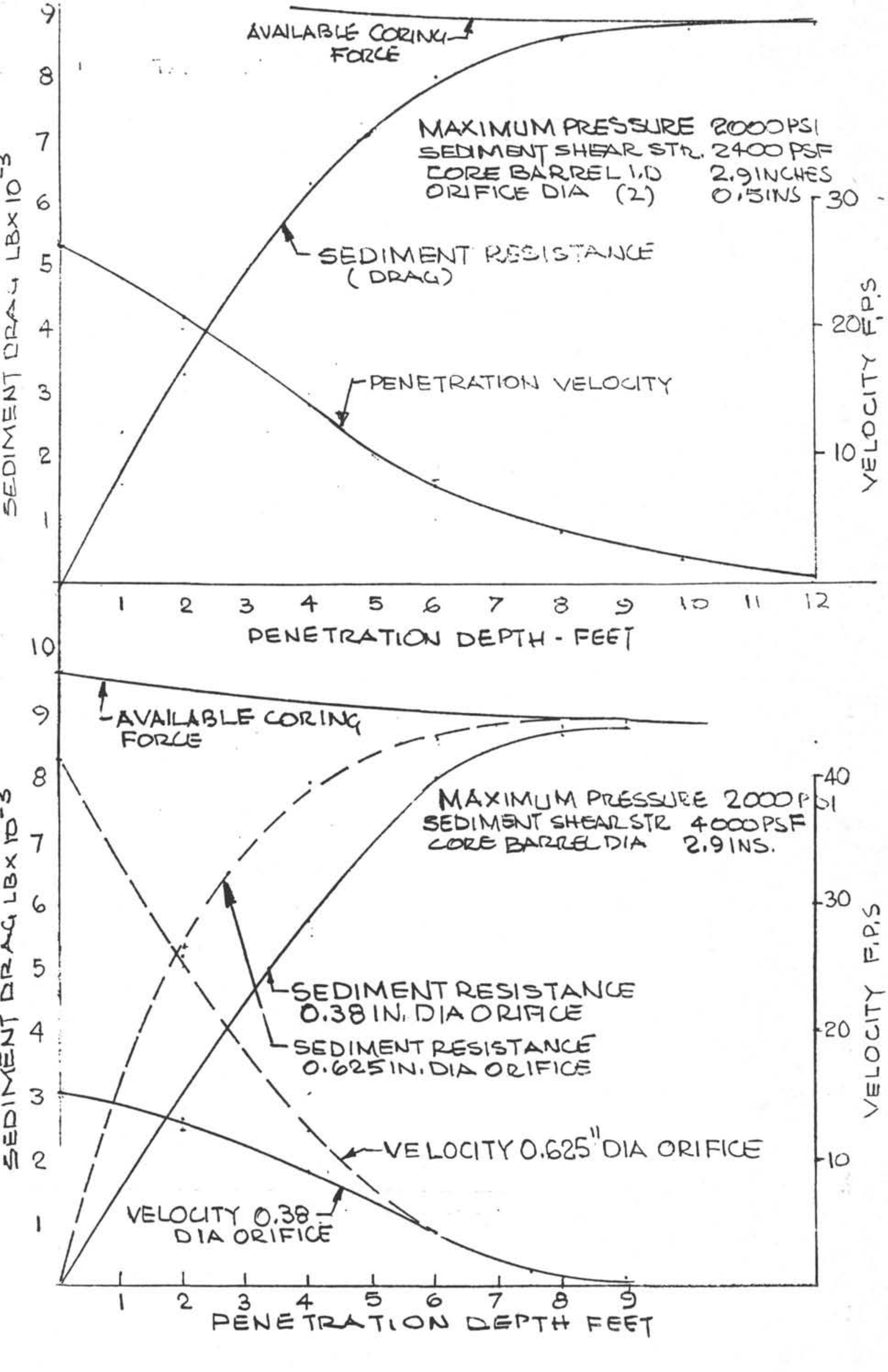

HYDRAULIC PISTON CORER FIGURE 7

MAXIMUM PRESSURE 3000 PSI
SEDIMENT SHEAR STRENGTH 1200 PSF
CORE BARREL I.D 2.90 INCHES
ORIFICE DIAMETER 0.50 INCHES

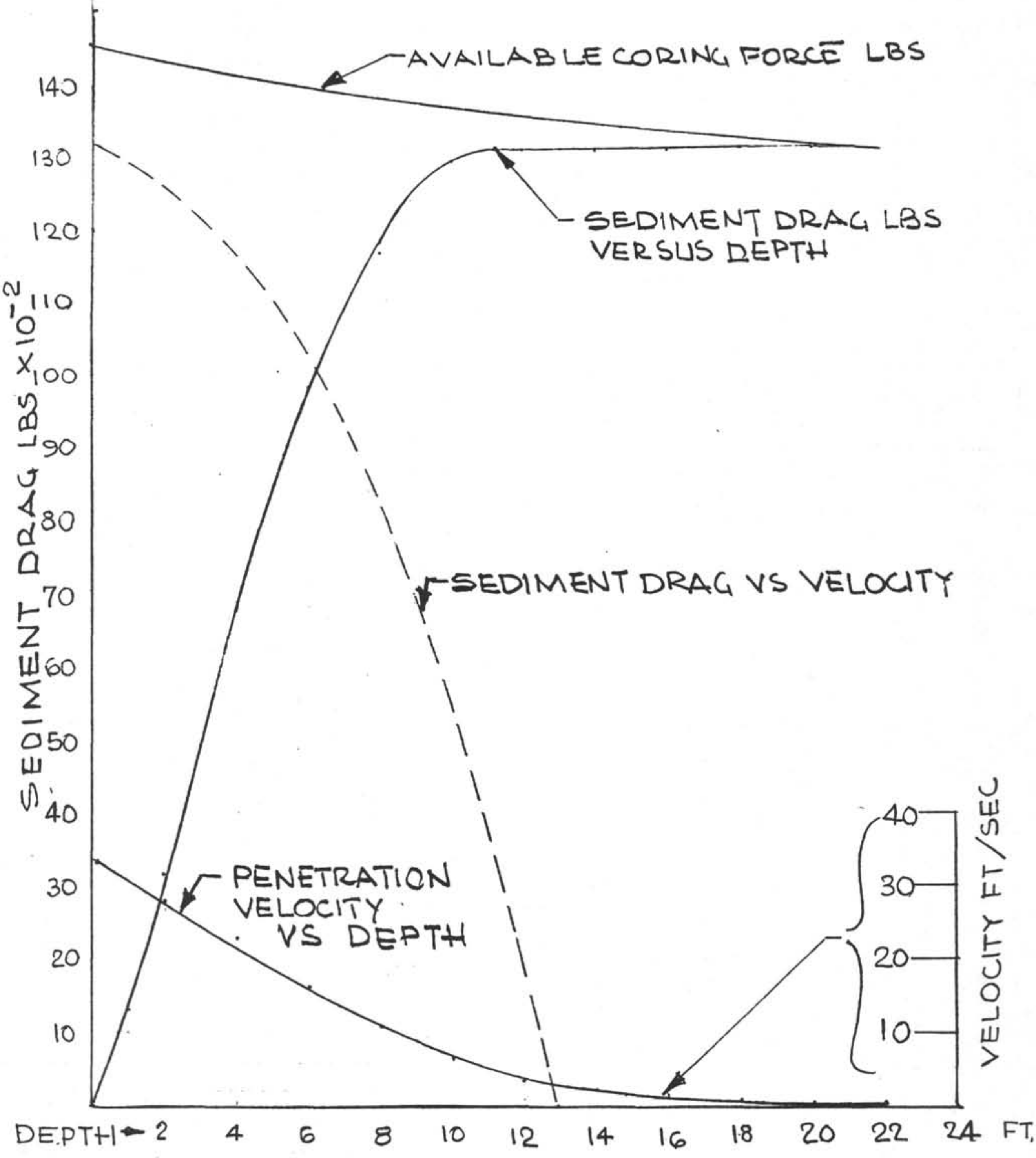

APPENDIX B

HYDRAULIC PISTON CORER

ORIFICE ANALYSIS

CONTENTS

Problem Statement

Work Done

Discussion

Conclusions

Topics

Orifice Sizing to control the H.P.C. penetration rate during coring. This control feature enables the recovery of high quality undisturbed cores to be retrieved.

An arrangement of Vent Orifices provides an efficient method for regulating the end of stroke velocity of the H.P.C, and effects a method of snubbing with reduced impact forces.

A data plot shows the decay in velocity vs the H.P.C. travel (snubbing stroke).

Prepared by: Wil Nugent
Wilfred Nugent.

HYDRAULIC PISTON CORER ORIFICE ANALYSIS

PROBLEM STATEMENT

Velocity control was a prime design factor in the development of the Hydraulic Piston Corer.
A method for regulating the rate of penetration of H.P.C. into a variety of sub-surface foundation materials was essential.

The procedure should be accomplished at the assembly or redress of the H.P.C. on the drill deck.

Protection against impact damage as the H.P.C. is scoped out to the full extended length should be provided.

OBJECTIVES.

Modification of the H.P.C. consistent with operation requirements, shear pin release, and related configuration build-up, should be accomplished in the sea state environment, from the drill deck.

WORK DONE.

The velocity control is accomplished by discharging the fluid through an orifice in the Lower Chamber.

The Expression: $V = \left(\frac{C_d a}{A^{3/2}}\right)\left(\frac{2g}{\rho}\right)^{\frac{1}{2}} \left[\text{Force - Drag}\right]^{\frac{1}{2}}$

is derived from $V = C_d a \sqrt{2g\frac{P}{\rho}}$

The piston Force is the product of the pressure and the area.
The Drag is a function of the dynamic impact pressure when penetrating the sediment.

The snubbing orifices function to reduce the rate of displacement of the H.P.C. barrel at the end of the end of the stroke, thus alleviating the impact forces.

DISCUSSION

The results of the orifice analysis indicate that the H.P.C. can be equipped with a range of velocity control orifices for both sediment penetration control, and end stroke impact avoidance.

BY W. Nugent DATE 11-30-79	PAGE
CH'KD. DATE	TITLE HYDRAULIC PISTON CORER

HYDRAULIC PISTON CORER ORIFICE REVIEW.

1. CONTROL ORIFICES IN THE UPPER CHAMBER BETWEEN THE OUTER BODY & THE UPPER SHAFT.

2. THE ORIFICES FUNCTION THROUGHOUT THE ACTUATION, THAT IS, THE COMBINED DISCHARGE RATE CONTROLS THE RATE OF PENETRATION. THEREFORE THE ORIFICES ARE SIZED TO PERFORM THAT FUNCTION.

3. SNUBBING ORIFICES LOCATED AT THE END OF THE TELESCOPING OUTER BODY ABOVE THE STATIONARY PISTON ENABLE VELOCITY CONTROL AND DAMPING TO BE ACCOMPLISHED SIMULTANEOUSLY.
E.G. WHEN THE FIRST HOLE-IN-LINE PASSES BELOW THE PISTON, FLUID DISCHARGE FROM THE UPPER CHAMBER & ABOVE STATIONARY PISTON, PRODUCES DAMPING. THE FIRST HOLE-IN-LINE NOW BELOW THE PISTON BLEEDS RIG FLUID & PRESSURE. THE RESULT: REDUCED FORCE ON THE PISTON, REDUCED DISPLACEMENT AND REDUCED DISCHARGE RATE FROM THE UPPER CHAMBER. (REF FIGURE 1)
REPEATING THIS SEQUENCE WITH 4 OR 5 ORIFICES PROVIDES AN EFFECTIVE CONTROL DEVICE.

4. THE CONTROL OCCURS AT THE END OF THE STROKE. THE SNUBBING ORIFICES HAVE CAPABILITY TO REDUCE THE VELOCITY TO .5 FT/SECOND FROM 46 FT/SECOND WITHIN 6 INCHES OF STROKE

5. THE RESULTS OF THE ANALYSIS ARE SUMMERIZED IN FIG. 2

6. ESTIMATE THAT IMPACT FORCE CAN BE CONTROLLED OVER THE LAST 0.5 INCH OF STROKE

$$KE = \frac{12 \times 400}{2} = 2400 \text{ FT LB}$$

FORCE = 60,000 LB.

BY ____________ DATE ________

CH'KD. ____________ DATE ________

PAGE ____________

TITLE ____________

INSTALLATION OF ORIFICES
IN ITEM 28 OUTERBODY.

REFERING TO THE INITIAL DESIGN REVIEW A CLEARANCE OF 0.03 WAS SUGGESTED TO PREVENT FLOW RESTRICTION IN THE UPPER CHAMBER FROM AFFECTING THE CORING VELOCITY THE MAXIMUM CORING VELOCITY WAS ESTABLISHED AT 20 FT/SEC. THE RATE OF DISCHARGE OF FLUID IS THAT DISCHARGED FROM THE LOWER CHAMBER.

OUTER BODY I.D = 2.875
ROD DIAM = 1.25
AREA = 5.265 IN^2
VOLUME DISCHARGED = 1263 IN^3/SEC

DISCHARGE PRESSURE IN UPPER CHAMBER RESULTING FROM DISCHARGING 1263 IN^3/SEC IS: (FOR CONCENTRIC CYLINDERS)

$$P = \frac{q\ l\ \gamma\ c_P}{d\ c^3\,(2.25 \times 10^5)}$$

$$= \frac{1263\,(6)\,(2)\,(1.02)}{2.625\,(.056)^3\,(2.25 \times 10^5)}$$

$$= 149\ P.S.I.$$

VENT HOLES & SHAFT CLEARANCE ARE SUFFICIENT TO DISCHARGE THE UPPER BARREL

q = FLOW IN^3/SEC
$c^3 = (D - d)^3$
γ = VISCOSITY CENTSTOKES
C_P = SPECIFIC GRAVITY

FIGURE 1

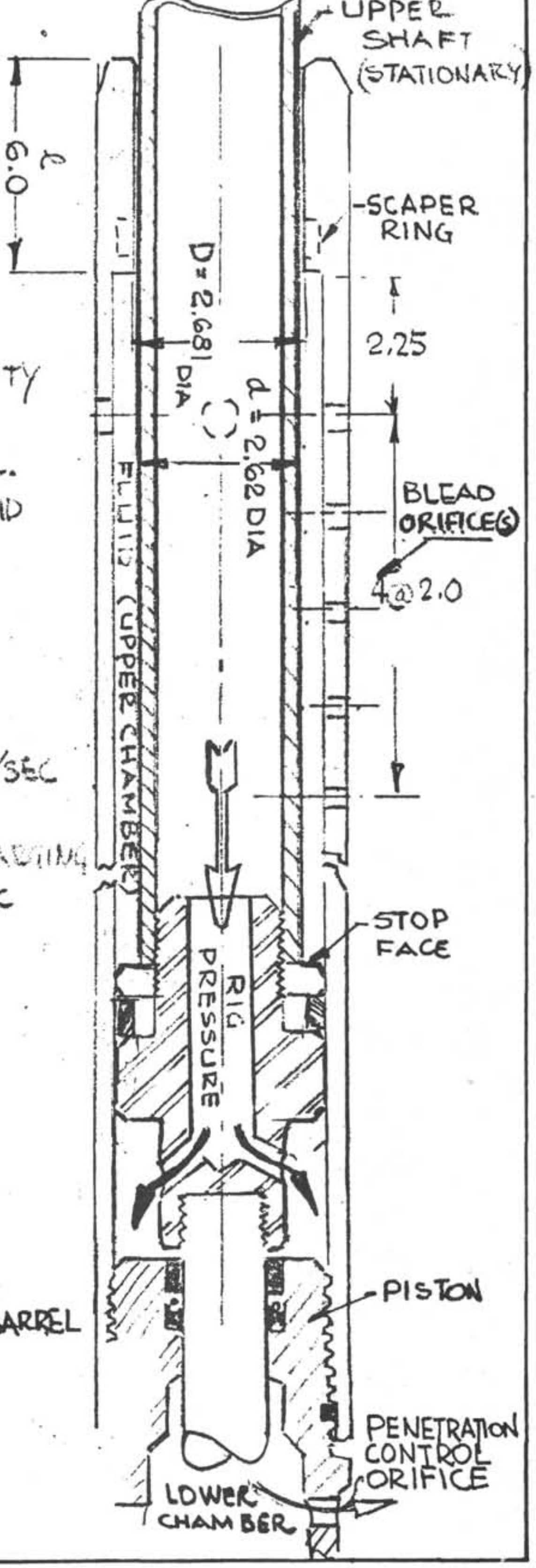

BY	DATE
CH'KD.	DATE

PAGE

TITLE HYDRAULIC PISTON CORER

SNUBBING ORIFICE ANALYSIS

CONDITION ; TAKING A CORE IN SEA WATER.

PRESSURE = 3000 P.S.I

PISTON AREA (ANNULUS) = 5.26IN^2 ($.03656 \text{FT}^2$)

CONTROL ORIFICE = $2 \times 5/8 = .0447$

C_d ORIFICE = .62

SLURRY MASS DENSITY σ = 3.6 SLUGS/FT^2

SLURRY SHEAR STRENGTH γ = 100 LB/FT^2

THEN RESISTANCE TO CORING = $.644\sqrt{(100 \times 3.6)}\ V$

SAY = 15 V.

$$V = .3779\left[15{,}780 - 15V\right]^{1/2}$$

$$7\left[V^2 + 2.14V - 2253\right] = 0$$

$$V^2 + 2.14V + (1.07)^2 = 2254.9$$

$$V + 1.07 = 47.48$$

$$V = 46.41$$

USE 46 FT/SEC AS THE CRITICAL VELOCITY FOR SNUBBING.

Q = FLOW IN THE CORER BARREL = 46 (.03656)

= 1.682 FT^3/SEC

CONSIDER VENTING THE FLOW FROM ABOVE THE PISTON TO REDUCE THE VOLUME OF FLOW IN THE CORE BARREL

BY ____________ DATE ________

CH'KD. ____________ DATE ________

PAGE ________________

TITLE ________________

SNUBBING ORIFICE ANALYSIS

PRESSURE	3,000 PSI = 432,000 PSF
PISTON VELOCITY P_o	46 FT/SEC
PISTON ANNULUS AREA A	.03656 FT²
VENT ORIFICE AREA = a	.00767 FT²
DISCHARGE COEFFICIENT C_d	.62
$C_d a$	.0005 FT²
FLOW RATE IN BARREL Q	V (A)

INITIAL VELOCITY 46 FT/SEC

$Q_o = 46(.03656) = 1.682$ FT³/SEC.

q = ESTIMATE FOR FLOW THROUGH A 3/8 INCH DIA ORIFICE

$= .0005\sqrt{43.2 \times 10^4} = .3286$ FT³/SEC

v = VELOCITY THROUGH ORIFICE = .3286/.0005 = 657 FT/SEC.

WHEN THE FIRST VENT IS EXPOSED BELOW THE STATIONARY PISTON

$Q_1 = 1.682 - .3286 = 1.353$ FT³/SEC

$V_1 = 1.353/.03656 = 37.$ FT/SEC

SOLVE FOR P_1

$$37 = .068\left[P - 555\right]^{1/2}$$

$$299{,}082 = P_1 = 2{,}077 \text{ P.S.I}$$

WHEN SECOND VENT IS EXPOSED

$C_d a = .001$

$Q_2 = .001\sqrt{299082} = .547$ FT³/SEC

$V_2 = 1.682 - (.3286 + .547)/.03657$

$= 22.06$ FT/SEC

BY ____________ DATE ________

CH'KD. ____________ DATE ________

PAGE ________________

TITLE ________________

SNUBBING ORIFICE ANALYSIS

SOLVE FOR P_2

$$22 = .136\left[P - 330\right]^{1/2}$$

$$26497 = P = 184 \text{ P.S.I}$$

WHEN THIRD HOLE IS EXPOSED.

$$C_d a = {,}0015$$

$$Q_3 = .0015\sqrt{26497} = {,}2442 \text{ FT}^3/\text{SEC}$$

$$V_3 = 1{,}686 - ({,}3286 + .547 + {,}2442)/.03656$$

$$= 15{,}37 \text{ FT/SEC}$$

SOLVE FOR P_3

$$15{,}37 = {,}2139\left[P - 15(15{,}37)\right]^{1/2}$$

$$5391 = P_3 = 37.43 \text{ P.S.I}$$

FINAL VENT 4-0.5IN DIA HOLES EXPOSED

$$C_d a = .0074$$

$$Q_4 = .0074\sqrt{5391} = {,}5433$$

$$V_4 = 1{,}682 - ({,}3286 + .547 + .2442 + .5433)/.03656$$

$$= 0.517 \text{ FT/SEC}$$

FORM NO. 1360-0

CHART N° 2

SNUBBING CHARACTERISTICS

CONDITIONS: 3000 PSI RIG PRESSURE
CURVE A HPC SHOT OUT IN WATERY SEDIMENT
CURVE B CORING IN 400 PSF SEDIMENT WITH
15 FT H.P.C.

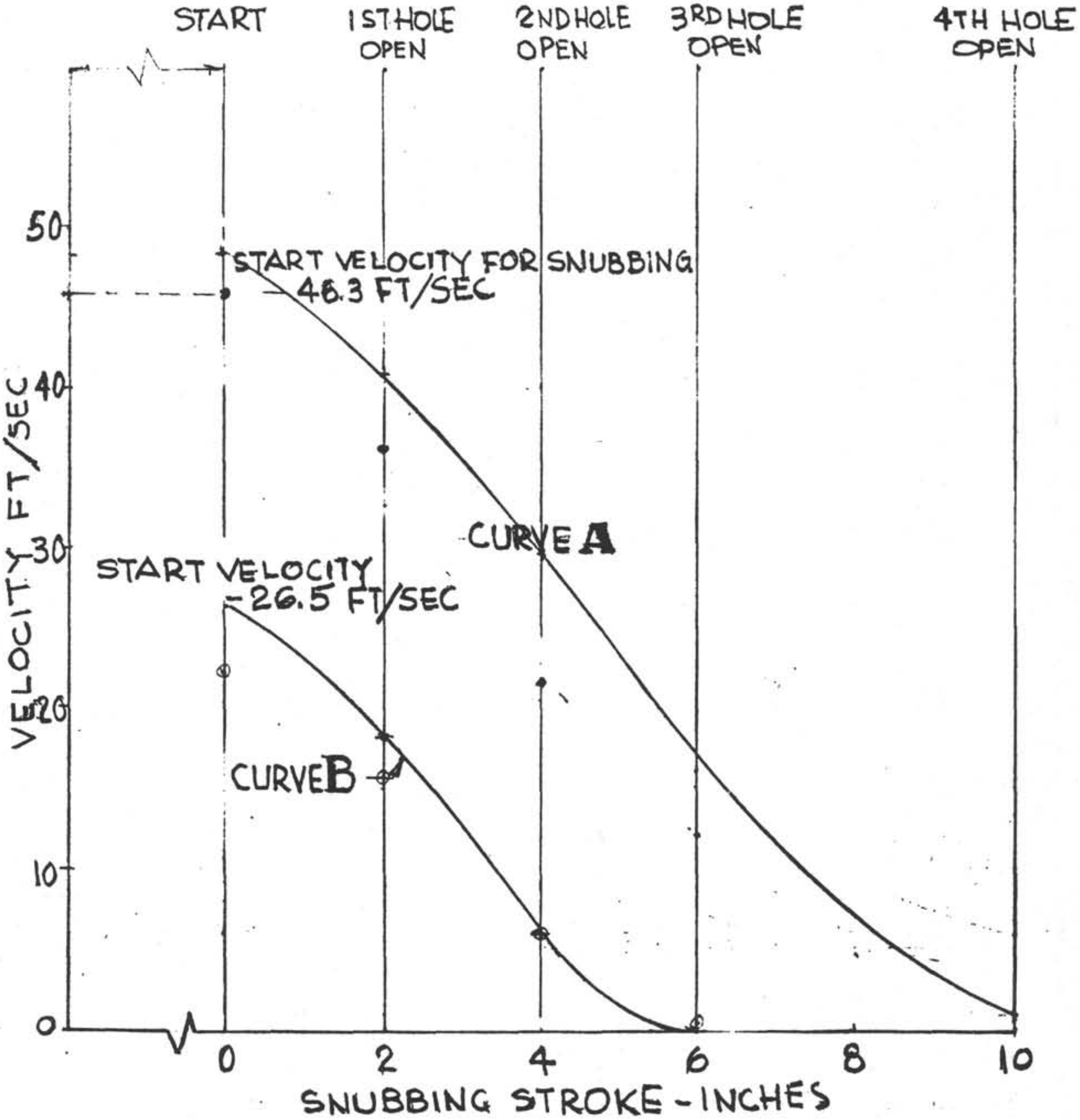

APPENDIX C

HYDRAULIC PISTON CORER

STRUCTURAL ANALYSIS

CONTENTS

Topics

Beam-Column Analysis of the Drill Collar and extended H.P.C. Corer Barrel.

Flexural Model Test. A unit load applied on a scale model to demonstrate the deflection characteristics of the H.P.C.

Froude Scaling Techniques applied to predict the magnitude of the full scale H.P.C. structural loads and stresses.

A Moment Distribution Analysis for the scoped-out H.P.C 9 M column.

A parametric analysis for varying distributed transverse loads Shows H.P.C. barrel length vs stress due to axial and transverse load application.

Prepared by: Wil Nugent
Wilfred Nugent.

HYDRAULIC PISTON CORER STRUCTURAL ANALYSIS.

Problem Statement

Requirements for coring into increasingly stiff sediment introduced the posibility of slant angle penetration, or other related conditons which could produce side load effects in addition to column loading. The increase in stresses on both the H.P.C. components and the drill collar were considered critical.

Objective

The objective of the analysis was to :

Predict the ability to recover long cores in stiffer sediment.

Preclude the possibility of yielding the H.P.C. core barrel thus preventing the retrieval of the H.P.C. through the drill pipe.

Providing guidelines for safe operation.

Work Done

A Beam-Column analysis was made to determine the combined bending characteristics of the H.P.C. and the Drill Collar. Particular attention was given to the location where the H.P.C. barrel exited the Drill Collar.

The Upper Shaft of the H.P.C. and the stationary piston were analyzed for similar loading conditions by moment distribution methods.

Scale models of equivalent dimensions were tested with axial and transverse loads applied. The reaction at the supports and contact points were observed and measured.

A Froude Scaling technique was used to calculate comparative values for full scale conditions.

Discussion

The results of these analyses and tests are presented herein. A parametric study was made which used the beam-column analysis approach to indicate the penetration depth (H.P.C. corer length) and differential side loading capability within the limits of the corer barrel yield stress.

Conclusions.

The analysis and the test show good co relationship considering that the model unit load test produced a 7.5 inch deflection and the analysis developed a 10.5 inch deflection.

The H.PC. core barrel and stationary upper shaft have sufficient flexural stability to be considered suitable for use in a 9 meter (30 Feet long) coring tool.

9.0 M. H.P.C. SCOPED OUT

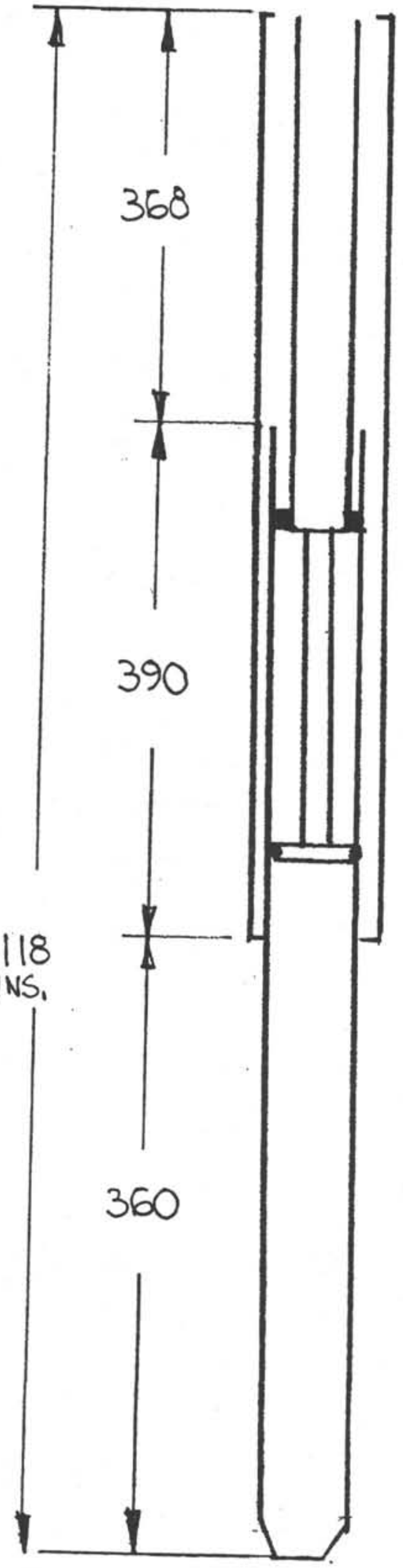

SUBJECT:
SECTION:
ENGINEER:
CHECKER:

W. NUGENT
3736 GAYLE STREET
SAN DIEGO, CA 92115

MODEL:
PAGE: 1
REPORT:
DATE: OCT 20. 1980

HYDRAULIC PISTON CORER STRUCTURAL ANALYSIS

CORE BARREL ANALYZED AS A BEAM COLUMN

CONDITIONS:
PISTON EXTENDED 30 FEET
END LOAD = 12,044 LB.

DIMENSIONS OF CORE BARREL
3.50 O.D. 2.875 I.D. ANNULUS AREA 3.1293 IN^2
$I = 4.005\ IN^4$, $Z\ 2.2886\ IN^3$, $\rho = 1.1323\ IN^2$

DIMENSIONS OF DRILL COLLAR
4.75 O.D. 4.12 I.D. ANNULUS AREA 4.357 IN^2
$I = 10.82\ IN^4$, $Z = 2.473\ IN^3$, $\rho = 1.576\ IN^2$

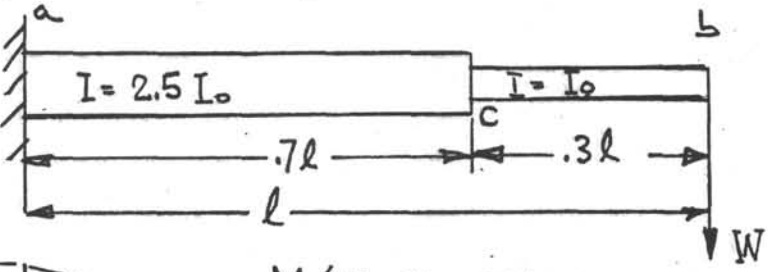

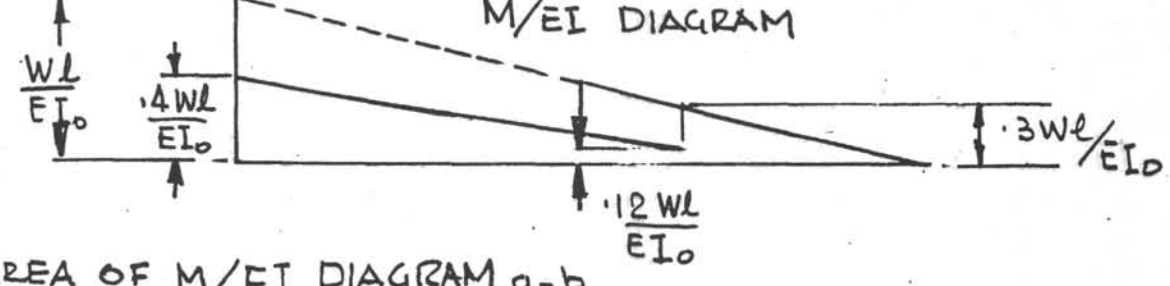

AREA OF M/EI DIAGRAM a-b

$$\theta_b = \tfrac{1}{2}\left(\frac{.3Wl}{EI_o} \times .3l\right) + \left(\frac{.12Wl}{EI_o} \times .7l\right) + \tfrac{1}{2}\left(\frac{.28Wl}{EI_o} \times .7l\right)$$

STATICAL MOMENT

$$\delta b = \frac{1}{EI_o}\left[\tfrac{1}{2}(.2l)(.3Wl)(.3l)\right] + [.35l(.12Wl)(.7Wl) + [\tfrac{1}{2}(.77l)(.28Wl(.7l)]$$

$$= \frac{1}{EI_o}\left[.009Wl^3 + .0294Wl^3 + .07546Wl^3\right]$$

$$\approx \boxed{\frac{.11386\,Wl^3}{EI_o} = \text{DEFLECTION DUE TO } W} \quad \text{EQ 1}$$

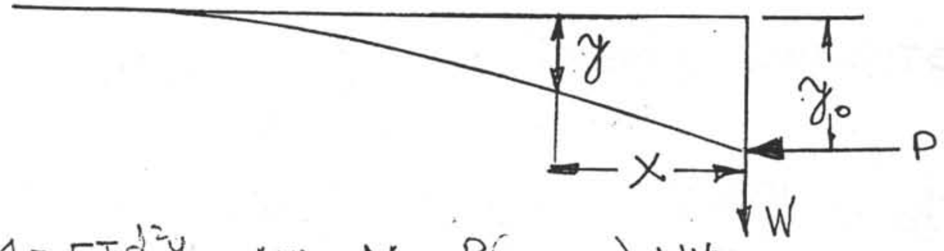

$M = EI\frac{d^2y}{dx^2}$ AND $M = P(y_0 - y) + Wx$

SO THAT

$$\frac{d^2y}{dx^2} = \frac{P}{EI}y_0 - \frac{P}{EI}y + \frac{W}{EI}x$$ AND DIVIDING BY P/EI

AND USING AS A SOLUTION $\boxed{y = A\sin Wx + B\cos Wx + \frac{Wx}{P} + y_0}$ EQ 2

$$\frac{d^2y}{dx^2} = -W^2A\sin Wx - W^2B\cos Wx$$
$$= -W^2(A\sin Wx + B\cos Wx) \text{ WHEN } W^2 = P/EI$$

AND WHEN $x = l$, $y = 0$, THEN $\frac{dy}{dx} = 0$; WHEN $x = 0$ $y = y_0$

$$\therefore\ 0 = A\sin Wl + B\cos Wl + \frac{Wl}{P} + y_0 \text{ AND}$$
$$0 = WA\cos Wl - W\sin Wl + \frac{W}{P}$$
$$y = 0 - B + y_0;\ \text{So } B = 0$$

AND $A = \frac{W}{PW\cos Wl}$ ALSO $A\sin Wl = \left(-\frac{W}{PW(\cos Wl)}\right)\sin Wl$

THEN $\frac{W}{PW}\tan Wl + \frac{Wl}{P} + y_0 = 0$ OR

$$y_0 = \frac{W}{P}\left(\frac{\tan Wl - Wl}{W}\right)$$ NOTE $\frac{P}{EI} = W^2$ & $\frac{Pl^3}{EI} = W^2l^3$

$$\boxed{y_0 = \frac{W}{\cancel{P}}\frac{\cancel{P}l^3}{EI}\left(\frac{\tan Wl - Wl}{W^3l^3}\right)}$$ EQ 3.

SUBSTITUTING $.11386 \frac{Wl^3}{EI_o}$ IN EQUATION (3) KNOWING $I = I_o$

$$y_o = \frac{.11386 W l^3}{EI_o}\left(\frac{\tan Wl - Wl}{W^3 l^3}\right)(.11386)$$

LET $U = Wl$ OR $l\sqrt{\frac{P}{EI}}$ RADIANS SINCE $W^2 = \frac{P}{EI}$

THEN

$$\boxed{y_o = \frac{.11386 W l^3}{EI_o}\left(\frac{\tan U - U}{U^3}\right)(.11386) = \text{DEFLECTION} \quad \text{AXIAL AND NORMAL LOAD ACTING}}$$

USING 13000 LB AXIAL LOAD $U = \sqrt{\frac{13000}{29\times10^6\times4}} = .01586$ RADIANS

$$\boxed{\frac{\tan U - U}{U^3}(.11386) = \frac{3.9095\times10^{-7}}{(.01586)^3}(.11386) = .03752}$$

$$\boxed{y_o = \frac{.11386 W (1118)^3}{29\times10^6 (4)}(.03752) = .0515 W}$$

BENDING MOM. ON HPC DRILL COLLAR
AXIAL LOAD = 13,000 LB
TRANSVERSE LOAD APPLIED AT W = 150 LB.

$B.M = Py_o + Wl = 13{,}000\,(.0515)\,150 + 150(1118)$
$= 268{,}125$ IN LB.

BENDING MOMENT ON H.P.C PISTON (STEP 'C')

REF.' M/EI DIAG. $.4\frac{Wl}{EI}$ MAX B.M. $.3\frac{Wl}{EI}$ B.M AT STEP 'C'

$B.M = 268{,}125\left(\frac{3}{4}\right) = 201{,}094$ IN-LB

$f_b = \frac{201{,}094}{4}\times1.75 = 87{,}978$ P.S.I.

HYDRAULIC PISTON CORER (H.P.C)

SCALE MODEL TEST
TO DETERMINE THE FLEXURAL CHARACTERISTICS OF THE H.P.C.

SCALING CONDITIONS

FULL SCALE H.P.C. BARREL		MODEL BARREL
O.D 3.5 IN	SECTION MODULUS	O.D. 0.191 IN. SOLID
I.D 2.7 IN	$I = 4.75 IN^4$	$I = 6.52 \times 10^{-5} IN^4$
WALL 0.4 IN		

$(\frac{1}{\gamma})^5$ = MOMENT OF INERTIA SCALE = 1 : 9.5 (F.S)

FULL SCALE UPPER SHAFT		MODEL UPPER SHAFT
O.D. 2.63 IN	$I = 1.70$	O.D 0.081 IN. SOLD
I.D. 1.88 IN		$I = 2.11 \times 10^{-6} IN^4$

$\left(\frac{1}{\gamma}\right)^5$ = MOMENT OF INERTIA SCALE = 1 : 15

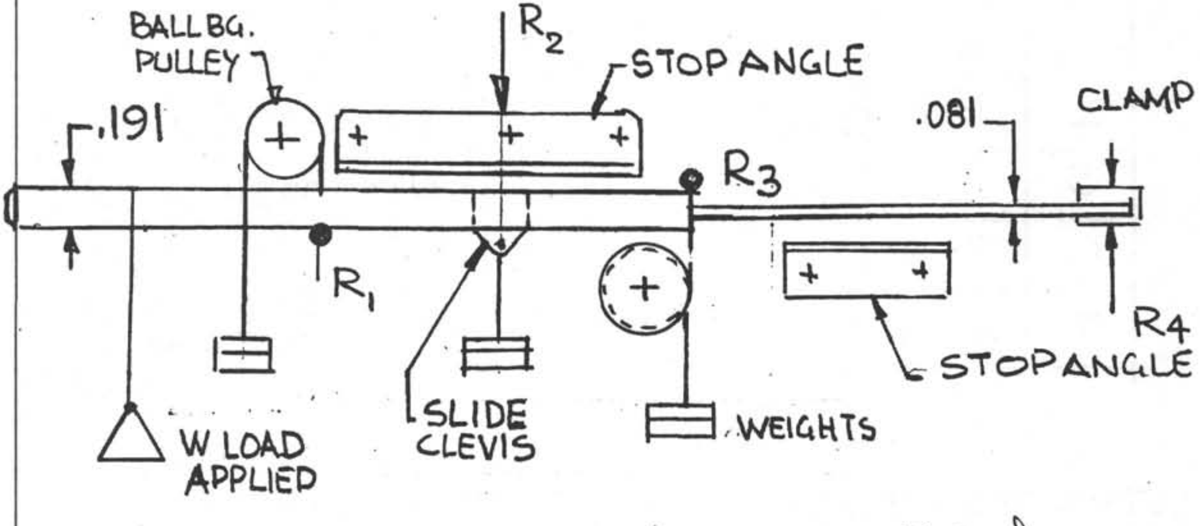

THE CORER MODEL WAS SUPPORTED AT R_1 & R_3 TO REPRESENT CONTACT POINTS AT THE DRILL BIT & THE I.D. OF THE DRILL COLLAR. THE STOP ANGLES REPRESENT THE I.D. OF THE DRILL COLLAR. DEFLECTION OF THE CORER COLUMN IS RESTRICTED AS THE CORE BARREL BENDS & MAKES CONTACT WITH THE DRILL COLLAR (REPRESENTED BY THE STOPS)

HYDRAULIC PISTON CORER (H.P.C.)

MODEL TEST CONTINUED

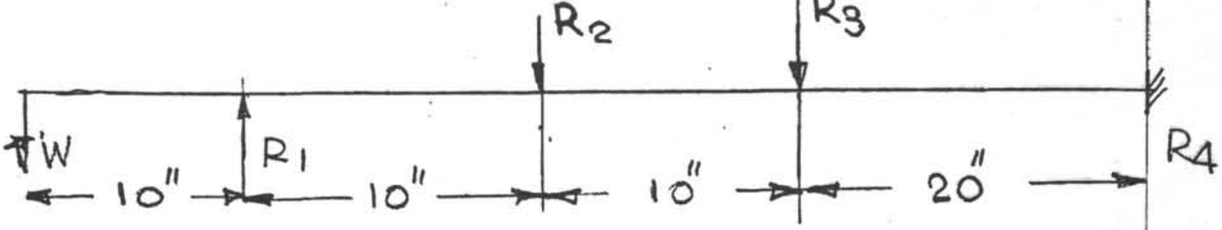

LOAD WAS APPLIED AT POINT W & THE CORER ASSUMED A CONDITION OF EQUILIBRIUM.

THE REACTIONS AT R_1, R_2 & R_3 WERE MEASURED BY ADDING WEIGHTS UNTIL CONTACT AT THE STOPS WAS JUST RELIEVED. THE REACTION AT R_4 WAS MEASURED WITH THE APPLIED LOAD REACTED AT R_1, R_2 & R_3

TEST Nº	APPLIED LOAD	REACTIONS				REMARKS
		R_1	R_2	R_3	R_4	
1	18OZ	22OZ		11OZ	7OZ	CONSTANT .191 DIA ROD
2	20OZ	30OZ	1/5OZ	1/2OZ	1/3OZ	CONSTANT .081 DIA ROD
3	16OZ	25OZ	2OZ	2 1/2OZ	CLAMPED	CONSTANT .191 DIA ROD
4	16OZ	27.6OZ	0	27.6OZ	CLAMPED	CONSTANT .191 DIA ROD
5	16OZ	29OZ	8OZ	3/4OZ	CLAMPED	CORER SCALE MODEL
6	31OZ	36.6OZ	11OZ	0		
7	40OZ	NOT MEASURED				SHAFT NEUTRALLY STABLE DEFLECTS AGAINST UPPER OR LOWER STOP

THIS TEST TENDS TO INDICATE THAT THE FORCE & MOMENT DISTRIBUTED TO THE UPPER SHAFT IS RELATIVELY SMALL COMPARED TO THAT EXISTING AT THE DRILL BIT.

HYDRAULIC PISTON CORER

FROUDE SCALING

FOR THE SECTION OF THE CORE BARREL EXTENDED BEYOND THE DRILL COLLAR

DEFLECTION $= \delta = \dfrac{W\ell^3}{8EI}$

SO THAT $\delta_{MODEL} = \dfrac{F_M L_M^3}{8EI_M}$ OR $\dfrac{\delta_M}{L_M} = \dfrac{F_M L_M^2}{8EI_M}$

WRITING

$$\frac{F_M L_M^2}{\cancel{8}\cancel{E}I_M} = \frac{F_{F.S} L_{F.S}^2}{\cancel{8}\cancel{E}I_{F.S.}} \text{ SO THAT } \frac{\delta_M}{L_M} = \frac{\delta_{F.S.}}{L_{F.S.}}$$

NOW

$$\frac{I_M}{I_{F.S.}} = \frac{FORCE_{MODEL}}{FORCE_{F.S.}}\left(\frac{L_{MODEL}}{L_{F.S.}}\right)$$

SINCE FORCE SCALING $= \left(\frac{1}{\gamma}\right)^3$ & L_M & $L_{F.S}$ SCALE $\left(\frac{1}{\gamma}\right)^2$

INERTIA SCALING $= \dfrac{I_M}{I_{F.S.}} = \left(\frac{1}{\gamma}\right)^3\left(\frac{1}{\gamma}\right)^2 = \left(\frac{1}{\gamma}\right)^5$

THEN

FORCE FULL SCALE

$$F_{F.S.} = \frac{F_M L_M^2 (I_{FS})}{I_M (L_{F.S})^2} = \frac{1 \times 20^2 \times 4}{6.521 \times 10^{-5} (300)^2} = 273\text{ LB}$$

$= 10.9$ LB/LIN FT.

DEFLECTION FULL SCALE

$$\delta_{FS} = \frac{\delta_M L_{F.S}}{L_M} = \frac{.5\ (150)}{10} = 7.5 \text{ INCHES}$$

CALCULATED BENDING MOMENT (NO AXIAL LOAD)

B.M = 273(150) = 40,008 IN. LBS

APPLIED AXIAL FORCE = 13,000 LB

TOTAL B.M = 13,000 (7.5) + 40,008

= 137,500 IN, LB (NO SECONDARY BENDING)

HYDRAULIC PISTON CORER

BARREL & UPPER SHAFT ANALYSIS

THE MODEL TEST SHOWED THAT FORCE REACTED BY THE UPPER SHAFT WAS RELATIVE SMALL FOR APPLIED TRANSVERSE LOAD.

WHEN AXIAL LOAD WAS APPLIED WITH THE MODEL HELD IN A POSITION AS DEFLECTED BY THE TRANSVERSE LOAD. THE ROD (MODEL BEAM) DEFLECTED AS INDICATED BY FIGURE

DEFLECTION - (UPPER SHAFT)

$$\delta_{F.S} = \frac{\delta_M L_{FS}}{L_M}$$

$$= \frac{.177(300)}{20} = 2.655 \text{ INS.}$$

APPLY 13,000 AXIAL LOAD

$$B.M = 13{,}000(2.655)$$

$$= 34{,}515 \text{ IN. LB.}$$

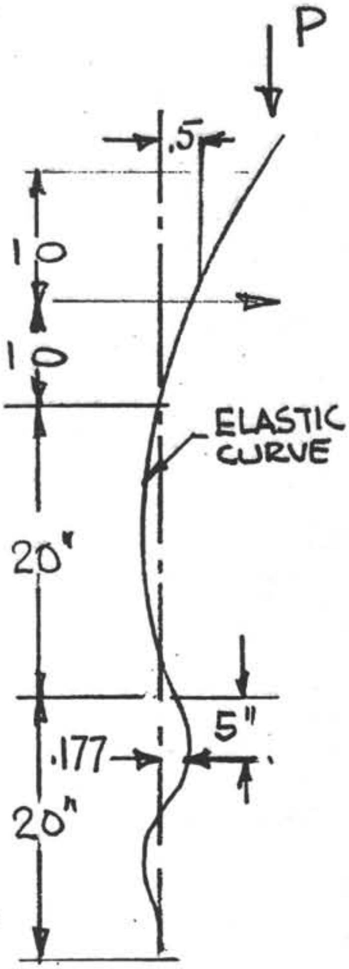

THE H.P.C. SEAL SUB HOLD DOWN

RIG PRESSURE 3,000 PSI
SEALING AREA 5.5 IN^2
HOLD DOWN FORCE = 16,500 LB

UPPER SHAFT - MAX BENDING

	AREA	I
2.63 O.D.		
1.88 I.D.	2.687 IN^2	1.75 IN^4

$$B.M = 16{,}500(2.655) = 43{,}807 \text{ IN LB}$$

$$f_b = \frac{43{,}807(1.25)(1.32)}{1.75}$$

$$= 41{,}304 \text{ PSI} < 87{,}000 \text{ PSI YIELD.}$$

UPPER SHAFT ANALYSIS

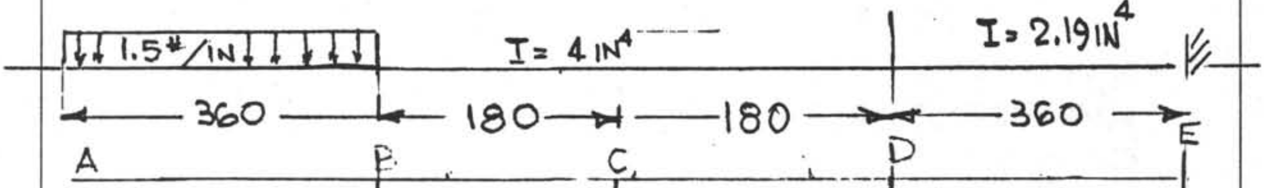

EI/L	0	.02	.013	.02	.013	.0006	.0006	∞
DIST FACTOR	0	1	.39	.61	.956	.044	0	1
CARRY OVER	0	.61	0	.61	.0	1		
FEM (KIPS)	+313.39	0						
BALANCE JOINT 'B'		-313.39						
CARRY OVER TO 'C'		0	-191.16					
BALANCE JOINT 'C'			+74.56	+116.61				
CARRY OVER TO 'D'		0			+71.13			
BALANCE JOINT 'D'					-68.	-3.13		
CARRY OVER TO E				0				
MOMENTS	+313.39	-313.39	-116.6	+116.6	+3.13	-3.13		

AXIAL LOAD = 13,000 LB.

DISTRIBUTED SIDE FORCE = 1.5 LB/LIN INCH

MAX BENDING MOMENT = $P y_o + \frac{w l^2}{2}$ = 313,390 IN-LB.

DIRIVATION OF CONSTANTS (CORRECTION FOR STIFFNESS FACTOR)
REFERENCE: BRUHN E.F. AIRCRAFT STRUCTURES A, 11, 21. 1952

SPAN	$L/\sqrt{\frac{EI}{P}}$	I/L	K_{FACT}	K	DIST FACT	C.O.F.
A.B	3.74	.011	—		0	0
BC	1.83	.022	.89	.02	1.	.61
CB	1.83		.59	.013	.39	0
CD	1.83	.022	.89	.02	.61	.61
DC	1.83		.59	.013	.956	0
DE	5	.0016		.0006	.044	∞

9. 13. 80

STRESS Vs CORER LENGTH

AXIAL LOAD P = 12,800 LB
RIG PRESSURE = 3,000 P.S.I
CORER PISTON O.D = 3.50 INCHES
CORE PISTON I.D. = 2.875 INCHES
SECTON MODULUS I = 4.005 IN^4

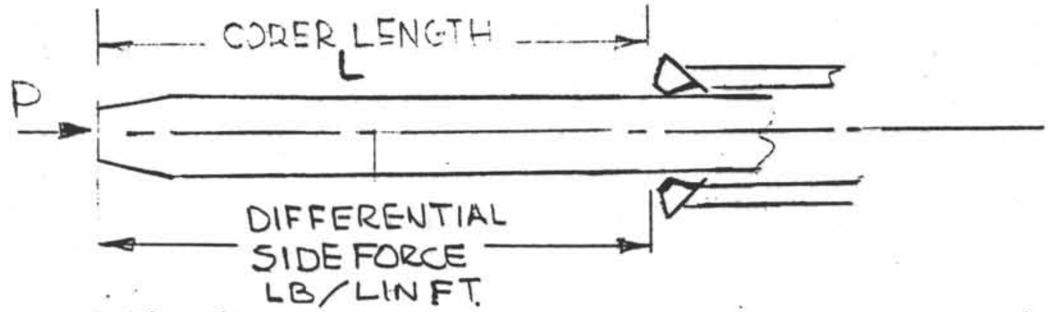

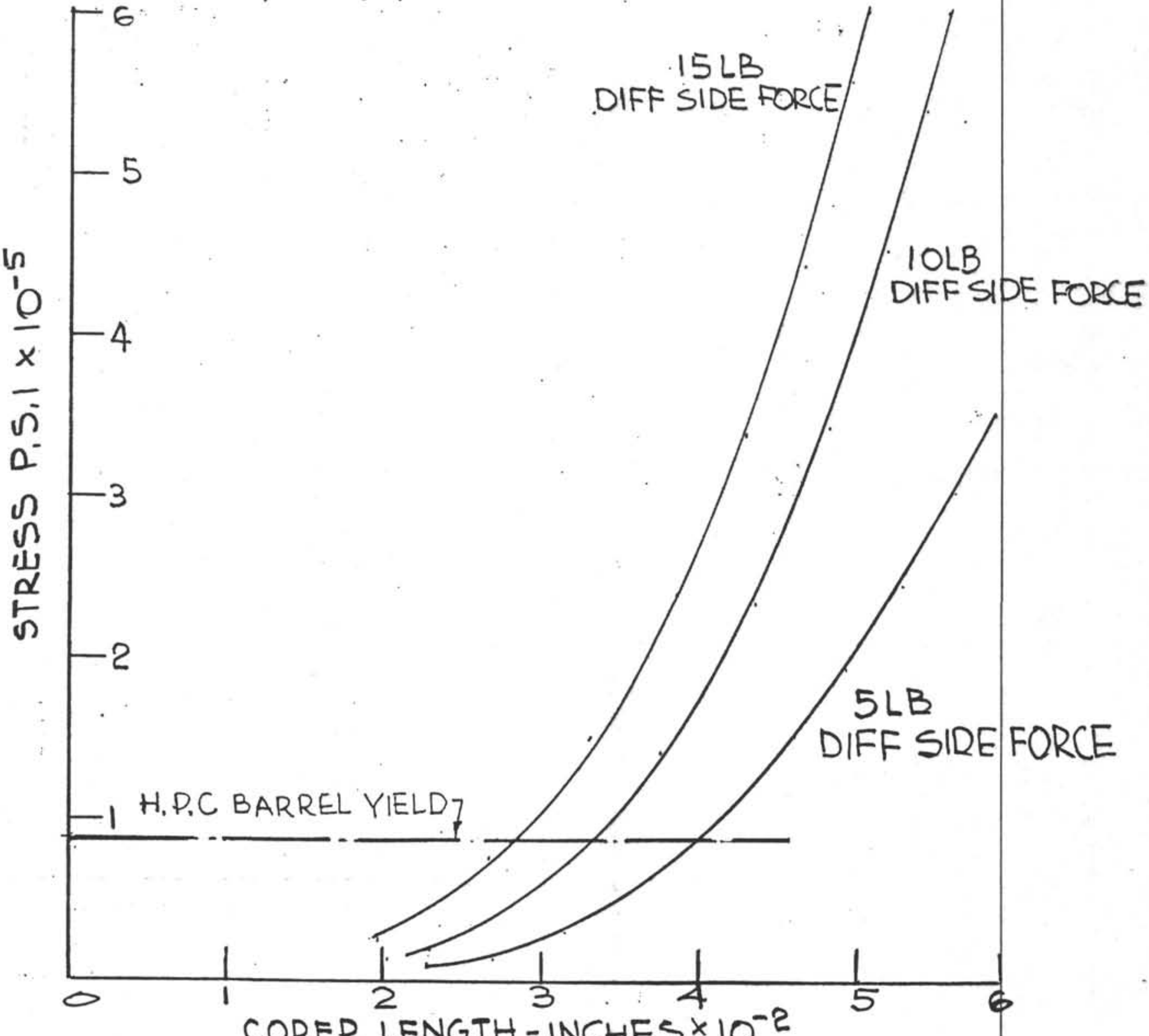

APPENDIX D

HYDRAULIC PISTON CORER
THREADED CONNECTIONS ANALYSIS

CONTENTS

Topics

Taper threads in relatively thin section pipe. Methods for reacting couping forces by shoulder abuttment.

The effects of reduced cross sectional area due to thread relief and pressure seal grooves.

The effects of "snatch" forces during H.P.C. make up and redress. Stopping of the travelling mass when taking inadvertent water cores.

Corrosion alleviation by substituting Nimonic stainless steel.

Prepared by: Wil Nugent
Wilfred Nugent.

HYDRAULIC PISTON CORER THREAD ANALYSIS

PROBLEM STATEMENT

The connecting thread elements used in the H.P.C. are generally consistent with thosed used in the drill string. In the H.P.C. function there are additional loads applied to the threads which result from load reversal, impact stop forces and pull-back. The available envelope (diameter of the drill collar and spacing of the components) is a constraining factor.

Lengthening of thread engagement can be accomplished without severe change to the configuration. The critical regions are in the area of thread relief,necessary to achieve shoulder-to-shoulder abutment, and the recesses for the seal rings.

The alleviation of corrosion and the substitition of material to meet that objective was were also included.

OBJECTIVES

The object of the analysis was to determine the feasibility of using corrosion resistant metal which may have lower working yield stress capability. The purpose was to investigate potential improvement in service life of the H.P.C., to reduce the time to redress the components between sucessive coring deployment; to improve the cost effectiveness and life expectancy of the equipment.

Work Done

Nimonic 60 stainless steel was proposed in an effort to combat corrosion and improve operational turn-around for the H.P.C. Particular attention was required in the areas of undercutting and recessing which create "notch sensitivity" especially when impact and load reversal conditions apply.
These critical sections were subjected to detail analysis.
The end stroke snubbing which involves methods for venting pressure and discharging the flow of fluid through drilled holes in the barrel had significant impact on the analysis.

Discussion

The analysis indicates that Nimonic 60 stainless steel in the mill condition was satisfactory but a reduced margin of safety resulted. The impact design case used showed the inner seal sub to have a negative margin. The condition can be solved by improvement in the snubbing system.
A summary of the results of the analysis is included along with recommendations for limiting the applied pull-out force.

BY [illegible] DATE [illegible]

CH'KD. ______ DATE 11-30-79

PAGE ______

TITLE ______

SUMMARY OF ANALYSIS

ITEM	DWG NO	DESCRIPTION	REMARKS
31 REF PAGE 1	1084	TOP SUB BODY	CONTROL IMPACT ≅ 70000LB STRESS ON THREAD CONNECTION TO UPPER SHAFT $f_t = 42{,}169$ PSI MARGIN = 1.3 ON YIELD FOR NITRONIC 60, S.S
27	1210 1213	SHAFT	UNDER CUT GROOVE FOR SHEAR PIN. 2.36 DIA – 1.875 DIA IMPACT FORCE ≅ 70,000 LB 43,392 P.S.I. MARGIN 1.29 ON YIELD FOR NITRONIC 60 ST. STL.
23	1214	INNER SEAL SUB	IMPACT FORCE ≅ 70,000 LB STRESS ON THREAD CONNECT WITH 1210 MARGIN 2.7 ON YIELD FOR NITRONIC 60 ST. STL. IMPACT 210,000 LB NEG 1.11 MARGIN ON YIELD FOR NITRONIC 60 ST. STL.
11	1231	DOUBLE PIN SUB	NO CHANGE MARGIN ADEQUATE FOR 4130.
8?	1212	LOWER OUTER BODY	IMPACT FORCE 210,000 LB. $f_t = 158{,}447$ P.S.I. IMPACT ≅ 70,000 $f_t = 52{,}830$

BY__________ DATE__________

CH'KD.__________ DATE__________

PAGE__________

TITLE__________

ITEM	DWG No.	DESCRIPTION	REMARKS
	1216	OUTER SEAL SUB	THREAD RELIEF IF IMPACT $\leq$ 70,000 LB f_t= 31,715 P.S.I. MAGIN ON YIELD FOR NITRONIC STAINLESS STEEL = 1.76
10	1219 1232	PISTON ROD	LIMIT PULL OUT FORCE NOT TO EXCEED 20,000 LB.

THE CRITICAL AREAS ARE THREAD RELIEF & UNDER CUT GROOVES.

THREAD LENGTHS CAN BE INCREASED TO PRODUCE INCREASED MARGIN.

REVIEW OF CONTROL ORIFICES IN UPPER CHAMBER

BY W. NUGENT DATE 11-13-79

CH'KD. ______ DATE ______

PAGE 1

TITLE HYDRAULIC PISTON CORER

TOP SUB - UPPER SHAFT ATTACH

TOP SUB BODY DWG N° 1084-04

ATTACHMENT TO UPPER SHAFT DWG 1210

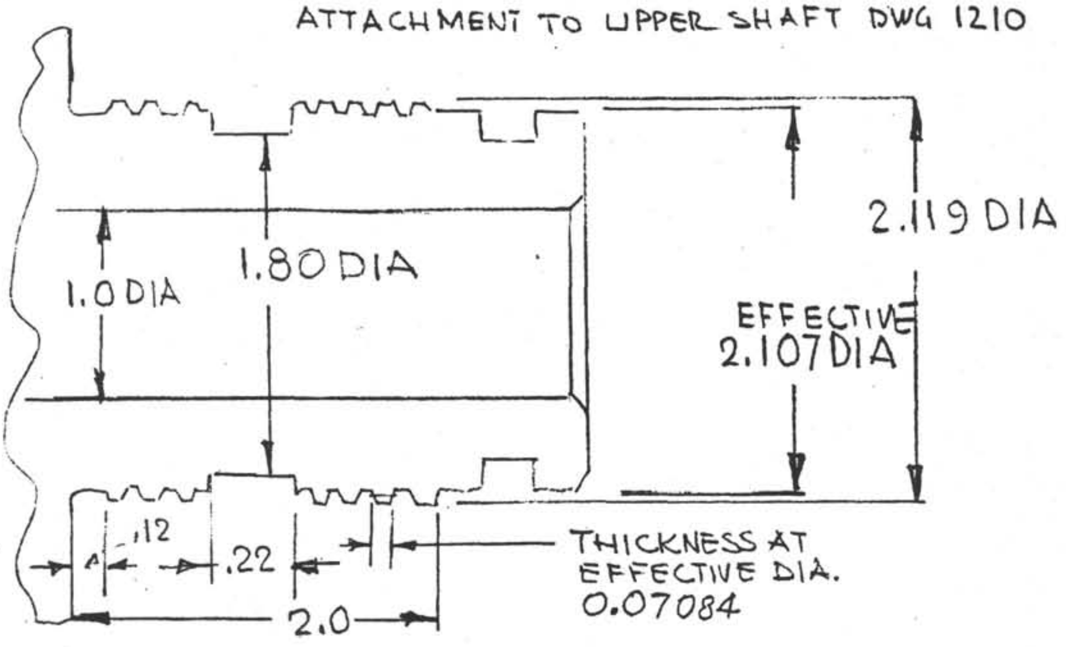

AREA OF THREAD IN SHEAR = $2.107\pi(1.66/.125)(.07084)(.80)$

$= 4.98\ IN^2$ (13 THREADS)

$= 3.00\ IN^2$ (8 THREADS ENGAGED)

PENETRATING LOAD (STATIC) (3,000 PSI RIG PRESSURE)

IMPACT STOP FORCE. REF WORK DONE MAY 1978

PISTON VELOCITY ~ 21 FT/SEC

MASS IN MOTION ~ 10 SLUGS

MOMENTUM DISSIPATED UNDER .001 SEC HALF SINE PULSE

ASSUME CONSTANT FORCE,

$Ft = m(V_2 - V_1) = 210$ LB SEC

FORCE = $210/.001 = 210,000$ LB

STRESS ON THREAD $= \frac{210,000}{3.00} = 70,000$ PSI (8 THREADS)

MAX No. THREADS ENGAGED

$\frac{2.0-(.12+.22)}{.125} = \frac{1.66}{.125} = 13.28.$; $f_t = 42,169$ PSI (13 THREAD)

MARGIN = 1.33 OVER YIELD FOR NITRONIC 60, ST. SL.

BY__________ DATE________
CH'KD.__________ DATE________

PAGE P.2
TITLE__________

ACME - 8 THREAD

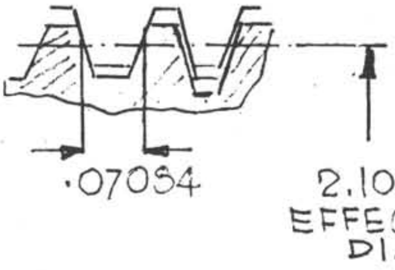

ACME 6 THREAD

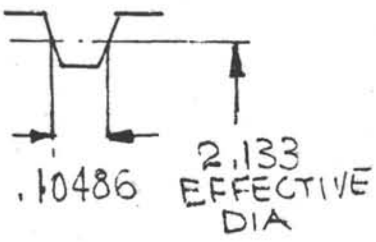

PENETRATION (STATIC ANALYSIS) 3000 X 5,5 = 16,500 LB.
8 THREADS ENGAGED f_t = 5500 PSI

UNDERCUT FOR SHEAR PIN (2.36-1.86) :: 1. = 1.657 IN^2
DYNAMIC IMPACT STOP FORCE = 210,000 LB
AT ITEM ㉙ UPPER SHAFT UNDERCUT * f_t = 126,720 LB

DYNAMIC IMPACT STOP FORCE (210,000 LB TAKING WATER CORE)

IF THE MATERIAL IS CHANGED TO NITRONIC 60 ST. STEEL THE DYNAMIC IMPACT FORCE MAY REQUIRE AN 8 THREAD ACME CONNECTION TO BE LENGTHENED (INCREASE THE THREAD ENGAGEMENT)

TOP SUB BODY TOP SUB CAP DWG - B1084-04 & B1083-03

- THREAD CONTACT AREA = 8.43 IN^2
IMPACT FORCE = 210,000 LB
f_t = 24,910 PSI (NOT CRITICAL)

* NOTE! THE UPPER SHAFT WAS FOUND TO BE CRITICAL IN 165 KSI MATERIAL DUE TO REACTING IMPACT STOP FORCES. REDUCING THE YIELD TO 56 KSI AGGRIVATES THE CONDITION. HOWER IF BY SNUBBING THE IMPACT OVER SAY 0.003 SECONDS THE IMPACT FORCE TO BE REACTED BECOMES 210/.003 = 70,000 LB AND THE STRESS BECOMES 42,245 PSI AT THE UNDERCUT.

IMPACT STRESS BECOMES LESS CRITICAL.

BY______ DATE______

CH'KD. ______ DATE______

PAGE 3

TITLE______

UPPER SHAFT DWG 1210
LOWER SHAFT DWG 1213

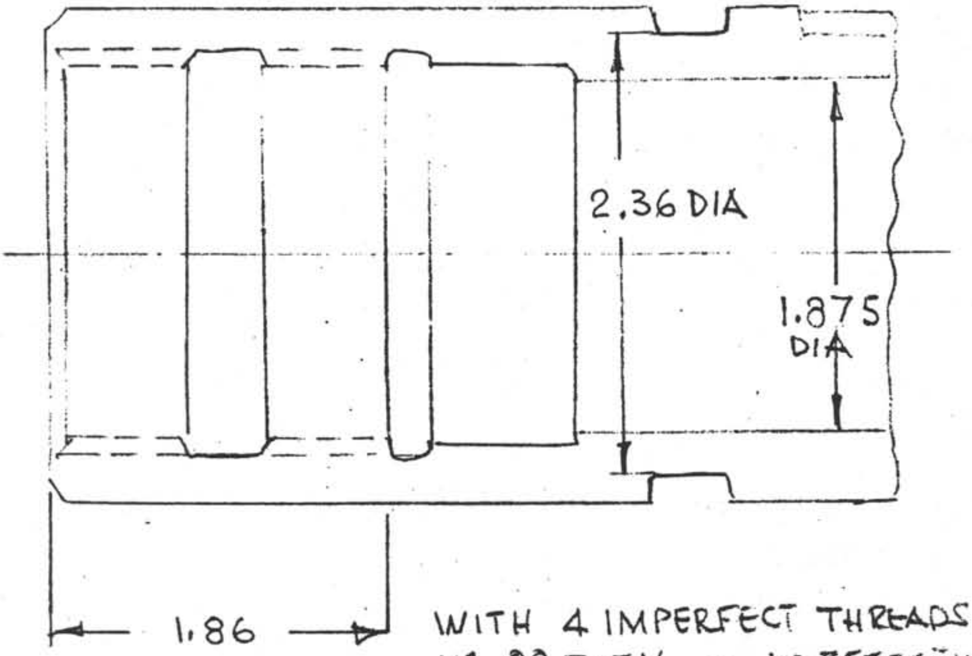

WITH 4 IMPERFECT THREADS
14.88 TOTAL ~ 10 EFFECTIVE THREADS

THREAD AREA = 3,75 IN^2
IMPACT FORCE = 210,000
f_t = 56,000 P.S.I

IMPACT FORCE = 210/.003
= 70,000.
f_t = 18,667 P.S.I

UNDERCUT AREA
IMPACT FORCE = 210,000
f_t = 130,177 PSI

IMPACT FORCE = 70,000
f_t = 43,392 P.S.I

LOWER SHAFT MAY SEE SOME RELIEF FROM THE IMPACT, BUT FOR THE SAKE OF UNIFORMITY THE DESIGN WILL BE STANDARDIZED.

BY ______ DATE ______
CH'KD. ______ DATE ______

PAGE P.4.
TITLE ______

INNER SEAL SUB. B.1214-00
THREADED CONNECTION TO UPPER SHAFT
PARTS B1214-00 - B1210-00
THREAD 2⅛ STUB ACME LENGTH OF ENGAGEMENT
3.75-(.75+.44+1.00) = 1.56 WITH 4 DISCONTINUOUS THDS.
EFFECTIVE AREA OF THREAD:
FULL THREADS ENGAGED = $9(2.107\pi) \times .071 \times .80 = 3.383$
CORING & PULL OUT FORCE ≤ 5.5(3000) = 16,500
$f_t = 4876$ PSI
NOT CRITICAL

IMPACT STOP (ASSUME SNUBBING EFFECTIVE IN .003 SEC)
$F_t = m(V_2 - V_1)$; = 21 × 10 THEN
$F = 210 / .003 = 70000$ LB
$f_t =$ 20,691 P.S.I. (MORE PROBABLE)

NOTE: THE EFFECT OF SNUBBING "SPREADING THE IMPACT OVER A LONGER TIME PERIOD REDUCES THE FORCE BUT THAT FORCE IS STILL TO BE REACTED BY THE UPPER SHAFT.

INNER SEAL SUB FOR ITEM ⑱ PIN
O.D = 1.795 AREA = 1.2935 IN² $f_t = 54{,}114$ PSI
I.D = 1.255 NOT CRITICAL THREADS BEAR THE LOAD.

INNER SEAL SUB- ROD CONNECTION
DWG B1214-00 & B1217-00
PULL OUT CONDITION = .8 (16500) = 13,200 LB
THREAD AREA = $1.066\pi(1.125/.125) \times .07084 \times .8 = 1.708$
$f_t = 7728$ P.S.I

NOT CRITICAL

BY__________ DATE__________

CH'KD.__________ DATE__________

PAGE P5

TITLE__________

DOUBLE PIN SUB DWG.B1231-00

ESTIMATE 5 STUB ACME

THREAD AREA ~ $3.13\pi(2/.2)(.13)(.80) = 10.3\ \text{IN}^2$

PENETRATION (STATIC ANALYSIS) = 16,500 LB

f_t = 1601 PSI

NOT CRITICAL

IMPACT FORCE (STOP ON UPPER SHAFT)

LOWER ASSEMBLY IS CONNECTED BY DOUBLE PIN SUB

IMPACT FORCE = 210,000 LB

f_t = 20,388 P.S.I

NOT CRITICAL FOR MAX IMPACT.

UNDERCUT MIL SLOTS

O.D 3.5	AREA	SLOT	EFFECTIVE ARE
I.D. 2.875	3.1293	.165	2.96

IMPACT $F_t = m(V_2 - V_1)$ = 210,000 LB

f_t = 70,842 P.S.I

IF IMPACT IS REDUCED TO 70,000 LB

f_t = 23,649 P.S.I

LOWER OUTER BODY - B1212

SIMILAR CONNECTION TO B1231 DOUBLE PIN

THREAD NOT CRITICAL

UNERCUT AT THREAD TERMINATION

O.D 3.5 AREA IMPACT FORCE = 210,000 LB

I D 3.25 1,325 f_t = 158,447 psi

IF IMPACT FORCE IS REDUCED TO 70,000 LB

f_t = 52,830 PSI

THIS SECTION WAS CRITICAL IN 4130 STEEL.

BY ______ DATE ______		PAGE P.6
CH'KD. ______ DATE ______		TITLE ______

OUTER SEAL SUB R-1216-00

THREAD CONNECTION TO OUTER BODY

3INCH-8-STUB ACME.

MAJOR DIA 3.00   EFFECTIVE DIA   WIDTH EFFECTIVE
MINOR 2.872   2.636   0.07084.

AREA IN CONTACT = $2.636\pi\,(2.00/.125)(07084)(.80)$
$= 7.50\ \text{IN}^2$

IMPACT FORCE - 210,000 LB
$f_t = 28{,}000$ P.S.I NOT CRITICAL

THREAD RELIEF
O.D = 2.63
I.D = 2.020
AREA = $2.20\ \text{IN}^2$

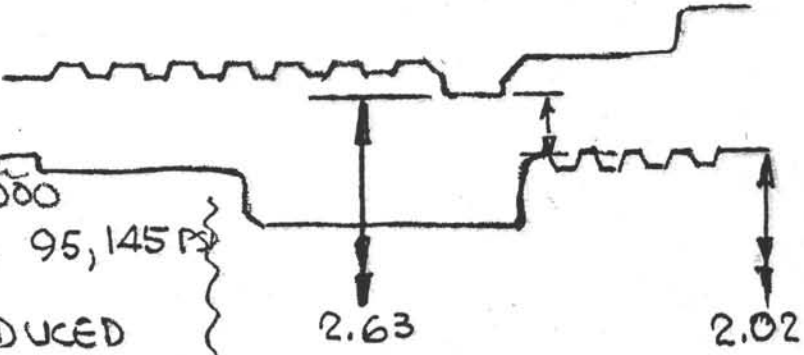

IMPACT FORCE 210,000
$$f_t = \frac{210{,}000}{2.20} = 95{,}145\ \text{PSI}$$
IF IMPACT IS REDUCED TO 70,000 LB
$f_t = 31{,}715$ PSI

PULL OUT FORCE = ,8(16500) = 13200
f_t = 6000 PSI NOT CRITICAL

THREAD CONNECTION TO SHOULDER SUB (R0919-01)

2.0 INCH - 8 - STUB ACME
LENGTH OF THREAD ENGAGEMENT = 1.50 INCHES
AREA = $4.5\ \text{IN}^2$
IMPACT FORCE 210,000; $f_t = 46{,}667$ P.S.I

MARIN = 1.2 OVER YIELD FOR NITRONIC 60 ST, STEEL.

10

BY ______ DATE ______
CH'KD. ______ DATE 11-16-79

PAGE P 7
TITLE ______

CENTER PISTON ROD DWG B1219
LOWER PISTON ROD DWG R1232
THE IMPACT FORCE IS REACTED ABOVE THE PISTON ROD CONNECTIONS.
THE CRITICAL LOADING CONDITIONS APPEAR TO BE PENETRATION & PULL OUT PLUS SNATCH LOADS
PENETRATION – COLUMN LOADING FULL FIXITY BOTH ENDS
PISTON ROD IN TENSION BY VIRTUE OF SLIDING FRICTION
HENCE ALLOW FRICTION COEFFICIENT = 0.2

PRESSURE MAXIMUM	= 3000 P.S.I
PISTON AREA ~	~ 5.5 IN^2
FORCE	~ 3300 LB
AREA	1.2272 IN^2
f_t	= 2689 PSI

EXTRATION FORCE USUME 3g JERK AT PULL OUT

$$f_t = \frac{16500 \times .8 \times 3}{1.2272} = 32,268 \text{ PSI.}$$

STRESS AT REDUCED SECTION = 39,560 PSI

THREADED CONNECTIONS R1232, A 1218, & B 1219
THREAD 7/8 N.S. COARSE 9 TPI LENGTH 1.12 (8 THREADS ENGAGED)
AREA = 0.42 IN^2 f_t = 94,285 P.S.I

LIMIT THE EXTRATION FORCE NOT EXCEED 20,000 LB.
STRESS ON THREADS f_t = 47,619 PSI

APPENDIX E

HYDRAULIC PISTON CORER
RETRIEVAL FORCE ALLEVIATION

CONTENTS

Topics

Study Matrix a listing and first order evaluation of proposed approaches for the solution.

Sketches for design concepts.

Description of a cursory test and scaling technique.

Prepared by: Wil Nugent
Wilfred Nugent.

HYDRAULIC PISTON CORER

RETRIEVAL FORCE ALLEVIATION

Problem Statement
Hydraulic Piston Coring into increasingly stiffer sediment, produces greater resistance to pull-out. These H.P.C. pull-out forces are approaching the capacity limits of ship-board auxilliary equipment.

The objective of this study is to evaluate methods for the alleviation the holding force of the corer barrel when driven into the sediment.

Candidate Approaches

Cutting shoe profile (shaping)

Fluid flow to the shoe tip & annulus.

Expendable sheath.

Rotation of the lower barrel.

Vibration & Jarring of the corer

Retrievable sheath.

Coated lower barrel.

Flexible shoe.

Study Matrix.
The study matrix presents a description, functional analysis, a statement on the available equipment, fabrication factors, test requirements and competitive criteria comparison.

Discussion
Sketches which show the configurations are shown to aid in the selection process of candidate concepts.
There appears to be a possibility of grouping concepts which involve similar design and/or functional approach.

Category Grouping
The shaping of the shoe may be designed to compress or splay the cored hole (sidewall) thus relieving the retention condition.
Items No1 & No 8 may be evaluated on competitive terms.
The expendable and retrievable sheath configurations 3 & 6 and the coated barrel No 7 have similar end approaches.

The Deep Sea Drilling Project has significant advantage over"gravity drop" oceanographic coring tools in that jarring and pull-back can be accomplished by raising the drill pipe.

RETRIEVAL FORCE ALLEVIATION
MATRIX

CONCEPT	DESCRIPTION	FUNCTION ANALYSIS	FAB. FACTORS	TEST REQMTS	REMARKS
Cutting Shoe Profile	Shape the external profile of the cutting shoe	Hydrodynamic shaping. Flow testing of models	Machine Test parts	Flow Channel Stab tests	No operational risk
Fluid flow to shoe & tip	Cut spiral flutes Cut flutes axially along core barrel	Break the side of the cored hole. Neg. Press. in pull-back draws in water lub.effect	Machine O.D. of barrel	Test in operation	Notches the barrel
Expendable Sheath	On O.D. of Barrel Instal a sliding element	Provide initial sliding at start of pull-out	No impact	Test in opation Stab tests	Left in core hole could cause problem
Rotation of Lower barrel	Unlock a thread connection & allow the barrel to rotate	Rotate the barrel to break the side hole bond	New design to unlock the cutting shoe in pull out	Model test & shore test in sediment	Core barrel must not rotate around core Destoy alignmt. or twist core
Vibration & Jarring	Use drill deck equipment				Limit force on drill string
Coated lower barrel	Hard smooth surface on lower barrel	Provide an inpenetrateable surface on the barrel	Electroplate Flame sp ay	Test in operation	No risk involved.
Corer barrel O.D. configurations	Refer to sketches 8,9,&10	Enlarge core hole during penetration relax during	New shoe Design	Stab test Test in operation	No risk involved.

BY W. NUGENT DATE 5/22/82

CH'KD. ____________ DATE ________

PAGE ____________

TITLE ____________

ITEM 8 & 10

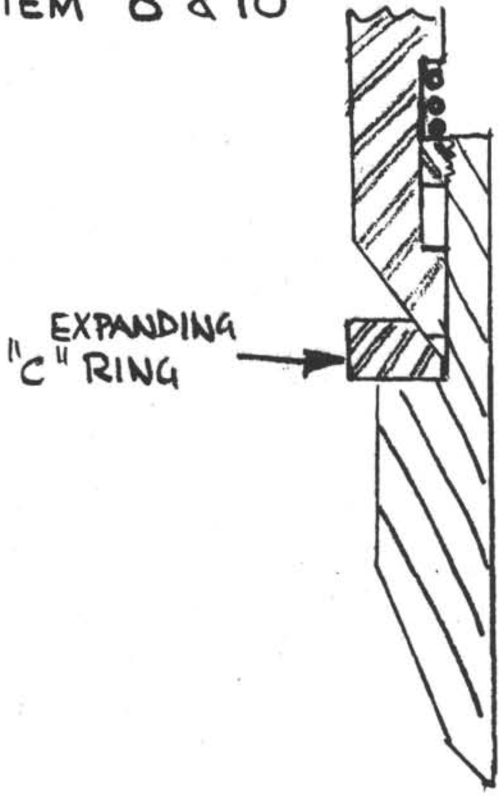

ITEM. 11
LATCH DOG.

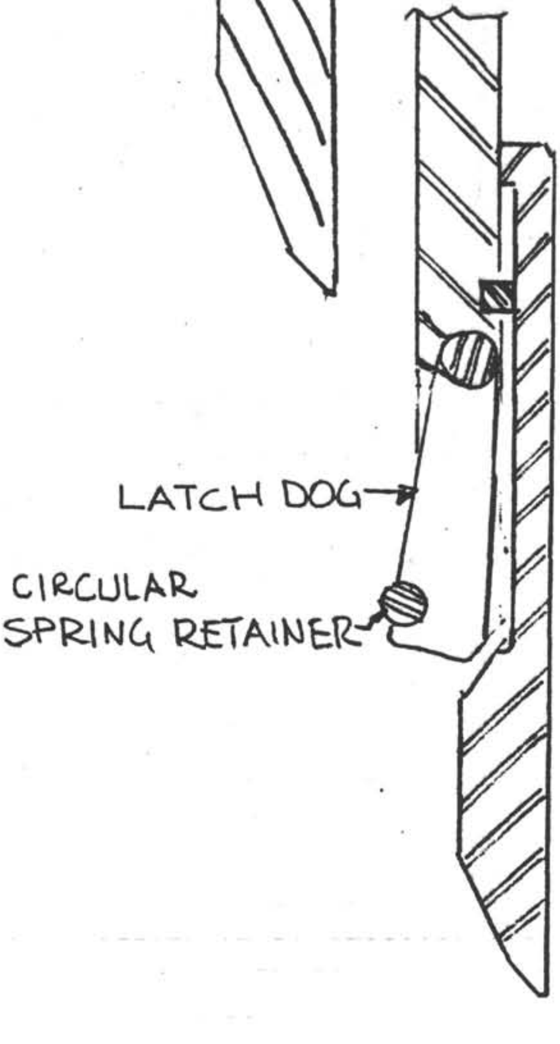

BY W. NUGENT DATE 5/23/82

CH'KD. ________ DATE ________

PAGE ________

TITLE ________

ITEM 9 FLEXIBLE SHOE

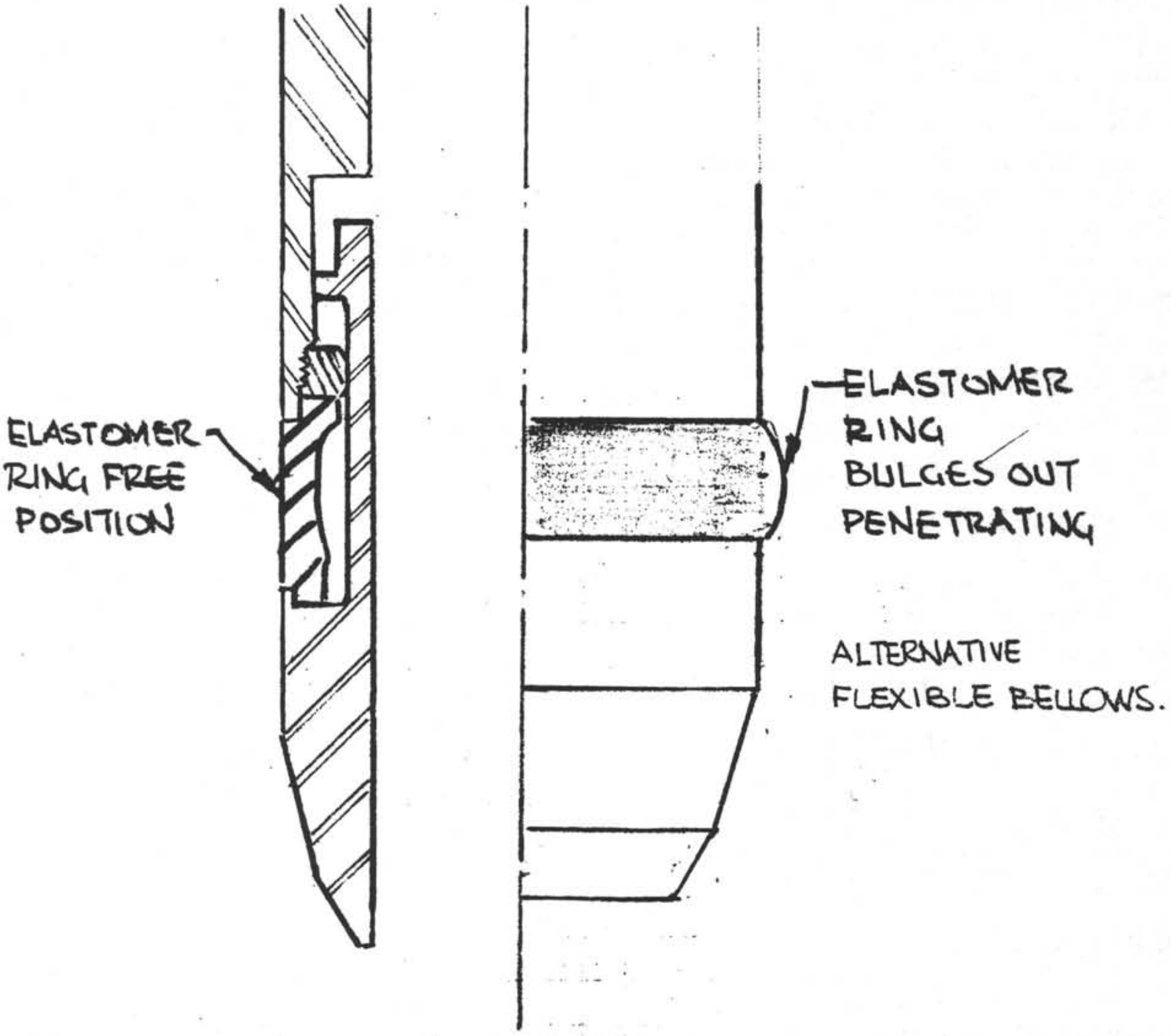

SCALE TEST

A CURSORY TEST WAS RUN TO QUALITATIVELY OBSERVE THE EFFECTS OF PULL BACK FORCE ON FOUR SECTIONS OF TUBE, DRIVEN INTO SATUARATED GARDEN CLAY. THE RESULTS ARE TABULATED AS FOLLOWS.

DIA INS.	CIRCUMF	6 INCH LENGTH FORCE	LOAD/IN	12 INCH LENGTH FORCE	LOAD/IN
3/8	1.178	6	.85	12.5	.884
1.	3.1416	13	.69	25	.663
1¼	3.927	15.5	.637	33	.70
1 3/4	5.977	18	.5019	—	—

THE (FORCE) LOAD PER INCH APPEARS TO DECREASE WITH INCREASE IN DIAMETER. HOWEVER IT SHOULD BE NOTICED THAT THE L/D RATIO IS 32 FOR A 12 INCH LENGTH OF 3/8 DIA TUBE WHEREAS THE L/D REDUCES TO 9.6 FOR A 12 INCH LENGTH OF 1¼ DIA TUBE.

APPLYING FROUDE SCALING FACTORS λ = LENGTH

λ^2 = AREA

λ^3 = FORCE

$$\begin{aligned} F_M &= V_M^2 / L_M g \\ F_F &= V_F^2 / L_F g \end{aligned} > \frac{F_M}{F_F} = \frac{V_M^2 L_F \cancel{g}}{V_F^2 L_M \cancel{g}}$$

$$\frac{V_{model}}{\sqrt{L_{model}\cancel{g}}} = \frac{V_{FULL\ SCALE}}{\sqrt{L_{FULL\ SCALE}\cancel{g}}}$$

THEN $$V_{model} = \sqrt{\frac{L_M}{L_F}}\,(V_F)$$

VELOCITY SCALING

$$V_{model} = \sqrt{\frac{1}{\gamma}}\,(V_{FULL\ SCALE})$$

PRESSURE SCALING

$$P_{model} = \frac{1}{\gamma} P_{FULL\ SCALE}$$

TOTAL FORCE $$W = \underbrace{\tfrac{1}{2}\rho V^2}_{\text{PRESSURE} = \left(\frac{1}{\gamma}\right)} \underbrace{S}_{\text{AREA} = \left(\frac{1}{\gamma}\right)^2} f$$

THEN $$W_{model} = \left(\frac{1}{\gamma}\right)^3 W_{FULL\ SCALE}$$

THE 3/8 DIA X 12 INCH TUBE MORE CLOSELY CONFORMS TO THE 3.5 INCH × 180 INCH CORER BARREL, & WILL

BE REVIEWED FOR COMPARISION USING FROUDE SCALING TECHNIQUES.

3/8 DIA TUBE

SCALE FACTOR $\ell = 9.334$

FORCE VARIES AS THE CUBE OF THE SCALE FACTOR

$$F_{\text{FULL SCALE}} = F_{\text{MODEL}}\,\ell^3$$

$$= 12.5\,(9.334)^3 = 10{,}165 \text{ LB}$$

THIS COMPARISON NEGLECTS THE LENGTH FACTOR $180/12 = 15$. TO COMPENSATE FOR THIS DIFFERENCE USE THE RATIO OF CIRCUMFERENCE 9.334 AND THE AREA SCALING FACTOR λ^2, AND THE PULL BACK FORCE PER INCH,

FOR THE 3/8 DIA x 12 INCH TUBE USE .884 LB/INCH

THEN

$$F_{\text{FULL SCALE}} = F_{\text{MODEL}}\,\lambda^2$$

$$= .884\,(9.334)^2 = 77 \text{ LB/INCH}$$

FOR 15 FEET LENGTH OF 3.5 INCH DIA CORER BARREL

<u>THE PROBABLE PULL BACK FORCE = 13,863, LB.</u>

THERE IS A HIGH PROBABILITY THAT THE PULL BACK FORCE INCREASES EXPONENTIALLY WITH THE DEPTH OF CORER PENETRATION.

APPENDIX F

HYDRAULIC PISTON CORER LANDING IMPACT

CONTENTS

Topics

A H.P.C. instrumented core barrel was to be landed onto a suuport bearing within the Drill String to a depth of 20,000 feet.

Terminal velocity estimates with varying hydrodynamic drag values

An evaluation of the impact on the instrument package.

Transmissibility of shock .

Testing of the shock mitigation device.

Prepared by: Wil Nugent

Wilfred Nugent.

W. NUGENT
Reg. Professional Engineer
Associate Fellow AIAA

Mr.S.T.Serocki. Chief Engineer
Deep Sea Drilling Project.
University of California at San Diego.
La Jolla, California

Subject: Impact of the Core Barrel on the Support Bearing Mount.

1.0 Problem Statement.
During coring operation an instrumented core barrel is allowed to fall within the drill pipe at its terminal velocity, estimated to be 500 feet per minute.

The purpose of this analysis is to define the impact acceleration and make a prediction as to the shape of the curve.

2.0 Work Done.
A check on the range of the terminal velocity was made, with variation in hydrodynamic drag coefficient.
An estimate of the spring rate for the elements and the characteristics at the impact face was made and used in the solution of a spring mass system.
Damping factors were developed and used intuitively

Five Cases were examined as follows:
I. Free fall of the mass at 10 ft/sec. no damping.
II " " 18 ft/sec. light damping
III " " 10 ft/sec. more heavily damped
IV Same as III, but with reduced damping coefficient & spring rate.
V same as IV, dut with reduced damping coefficient.

An additional analysis evaluates the effect of the impact on the instrument package installed within the core barrel.

3.0 Conclusions.
The conclusions drawn from the work done are:
1) Case I an undamped system does not occur in reality, but serves to indicate the maximum impact condition for the selected case.

2) Case II was developed to examine the effects of increased descent velocity (18ft/sec.)

3) Cases III, IV, and V, vary mainly by the degree of damping coefficient applied.

4) Case II presents the most severe condition.

5) The instrument package can be protected against exposure to high positive or negative acceleration if the mounting has a spring frequency $f = \frac{1}{2\pi}\sqrt{\frac{k}{m}} = 83.5\,Hz$ A 30 lb instrument sees 30g.

The data generated is plotted for Cases I, II, III, IV, & V.
The plotted data shows the Change in Velocity versus Time and enables the acceleration to be derived as a tangent to points on the curve.

3736 Gayle Street
San Diego, CA 92115
Telephone
(714) 582-0530

VALUES FOR C AND K.

THE CORE BARREL PACKAGE FALLS AT A TERMINAL VELOCITY ATTAINED WHEN THE STATE OF EQUILIBRIUM IS REACHED BETWEEN THE TOTAL DRAG FORCE ACTING (FRONTAL & SURFACE FRICTION) AND THE WEIGHT. THEN $W = D$.

IN A FLUID MEDIUM DRAG IS EXPRESSED AS $\frac{1}{2}\rho C_D S V^2$

THEN $W = \frac{1}{2}\rho C_D S V^2$

AND

$$V = \left(\frac{W}{\frac{1}{2}\rho C_D S}\right)^{1/2}$$

FROM THE GEOMETRY OF THE CORE BARREL A C_D OF 2 IS USED

THE MASS DENSITY OF SEA WATER ~ 2

FRONTAL AREA $12\ IN^2 = \frac{1}{12}\ FT^2$

$$\left(\frac{360 \times 12}{2}\right)^{1/2} = 46.47\ FT/SEC$$

THE VALUE FOR DRAG COEFFICIENT FOR A LONG SLENDER BODY MOVING WITHIN A CYLINDER IS SIGNIFICANTLY HIGHER THAN THE CHARACTERISTIC CASE OF 2.0 THEREFORE CONSIDER AN INCREASE BY ORDER OF MAGNITUDE, AND WE GET 14.7 FT/SEC

SPECIFIED VELOCITY IS 500 FT/MIN. ~ USE 10 FT/SEC

DAMPING CONSTANT ZERO TO ESTABLISH MAXIMUM IMPACT

SPRING RATE

USING 180,000 PSI BEARING STRESS AND .80 OF THE ANNULUS AREA OF THE IMPACT STOP. ~ $2.64\ IN^2$

ASSUME THE COLUMN DEFLECTS 0.12 (BOWING DURING IMPACT)
DEFLECTION OF CONTACT 0.005
BEARING DEFLECTION 0.005
TOTAL DEFLECTION 0.13 INCHES ≅ .01 FT.

ALLOWABLE SURFACE LOAD = 180,000 × 2.64 = 475,200 lb.
SPRING RATE LB/FT = 47,520,000

THE PLOT OF THESE DATA POINTS WILL INDICATE A CONTINUING CYCLE WHICH IN REALITY DOES NOT OCCUR.

SUBJECT: D.S.D.P.
SECTION: CORE BARREL
ENGINEER:
CHECKER:

N. NUGENT
3736 GAYLE STREET
SAN DIEGO, CA 92115

MODEL:
PAGE:
REPORT:
DATE: APRIL 12, 1977

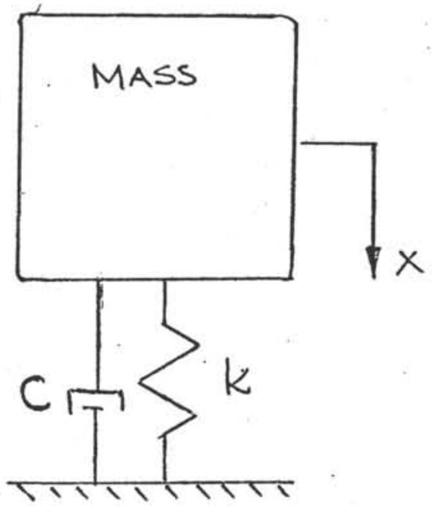

WRITING THE EQUATION OF MOTION IN TERMS OF THE DISPLACEMENT X, A DAMPING CONSTANT C AND A SPRING RATE k, THE FOLLOWING EQUATION IS DEVELOPED

$$c\dot{x} + kx = -m\ddot{x}$$

OR $\frac{d^2x}{dt^2} + \frac{c}{m}\frac{dx}{dt} + \frac{k}{m}x = 0$ EQU (1)

LET $c/m = 2a$ AND $k/m = b^2$

THEN EQU (1) CAN BE WRITTEN AS $\frac{d^2x}{dt^2} + 2a\frac{dx}{dt} + b^2x$

SOLVING THE QUARATIC USING $Ae^{\alpha t}$

$$\alpha^2 + 2a + b^2 = 0$$

$$\alpha + a = \pm\sqrt{a^2 - b^2}$$

$$\alpha_1 = -a - \sqrt{a^2 - b^2}$$

$$\alpha_2 = -a + \sqrt{a^2 - b^2}$$

THEN $x = Ae^{\alpha_1 t} + Be^{\alpha_2 t}$ IS THE COMPLETE SOLUTION

NUMERICAL ANALYSIS CASE N° 1

MASS OF CORE BARREL = .360/32.2 = 11,180 LB SEC²/FT
ACCELERATION = T.B.D. ~ 600g EST.
DESCENT VELOCITY = 10 FT/SEC
SPRING RATE = 47.5 X 10⁶ lb/FT.
DAMPING CONSTANT = .0

FROM PAGE (1) $X = Ae^{\alpha_1 t} + Be^{\alpha_2 t}$

1,449,

$c/m = 2a = 0, \quad k/m = b^2 = 4{,}248{,}611; \quad b = 2061$

LET b = 2000 FOR NUMERICAL ANALYSIS

$$\alpha = -a \pm \sqrt{a^2 - b^2} \qquad \text{WHEN } a = 0, \quad b^2 = 4{,}000{,}000$$

$$\alpha = \pm 2000 i$$

THEN

$$x = Ae^{(2000i)t} + Be^{(-2000i)t}$$

$$= e^t\left(Ae^{2000i} + Be^{-2000i}\right)$$

AND WHEN C & D ARE CONSTANTS DEPENDING ON THE INITIAL CONDITIONS,

$$X = e^t(C\cos 2000t + D\sin 2000t)$$

$$\frac{dx}{dt} = e^t(C\cos 2000t + D\sin 2000t) + e^t(-2000C\sin 2000t + 2000D\cos 2000t)$$

FOR THE INITIAL CONDITIONS $X = 0$, $V = 10$, & $t = 0$

WHEN $t = 0$, $X = 0$. THEN $C = 0$
WHEN $t = 0$, $V = 10$. THEN $D = .005$

PUT THESE VALUES IN $X = e^t(C\cos 2000t + D\sin 2000t)$

$$= e^t(.005\sin 2000t)$$

$$\frac{dx}{dt} = e^t(\underbrace{.005\sin 2000t}_{\text{SMALL}} + 10\cos \overset{v}{2000}t)$$

$$\frac{d^2x}{dt^2} = e^t(.005\sin 2000t + 10\cos 2000t) + e^t(10\cos 2000t - 20000\sin 2000t)$$

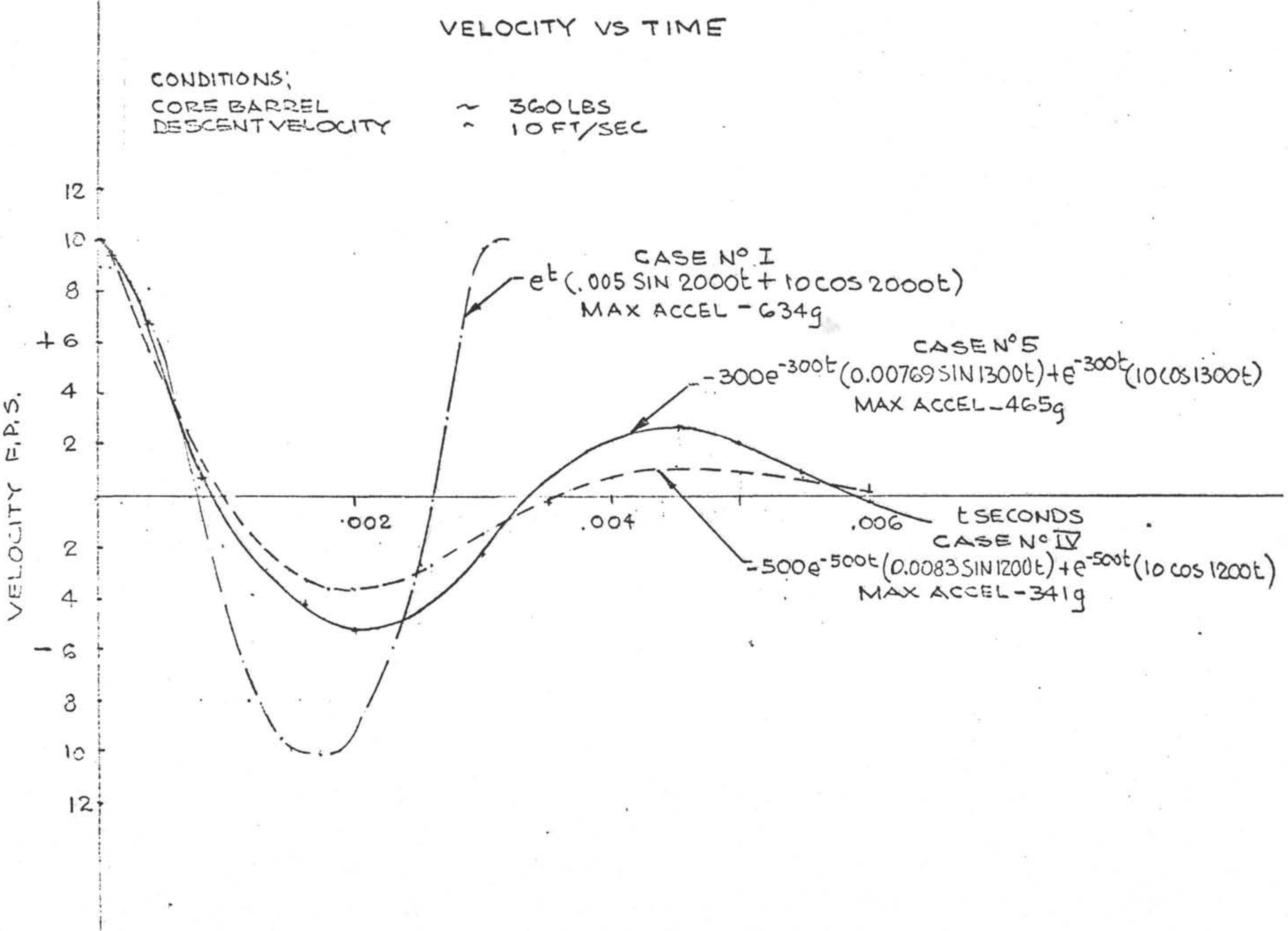

VELOCITY VS TIME

CONDITIONS;
CORE BARREL ~ 360 LBS
DESCENT VELOCITY ~ 10 FT/SEC

FIGURE 1 WN 4.22

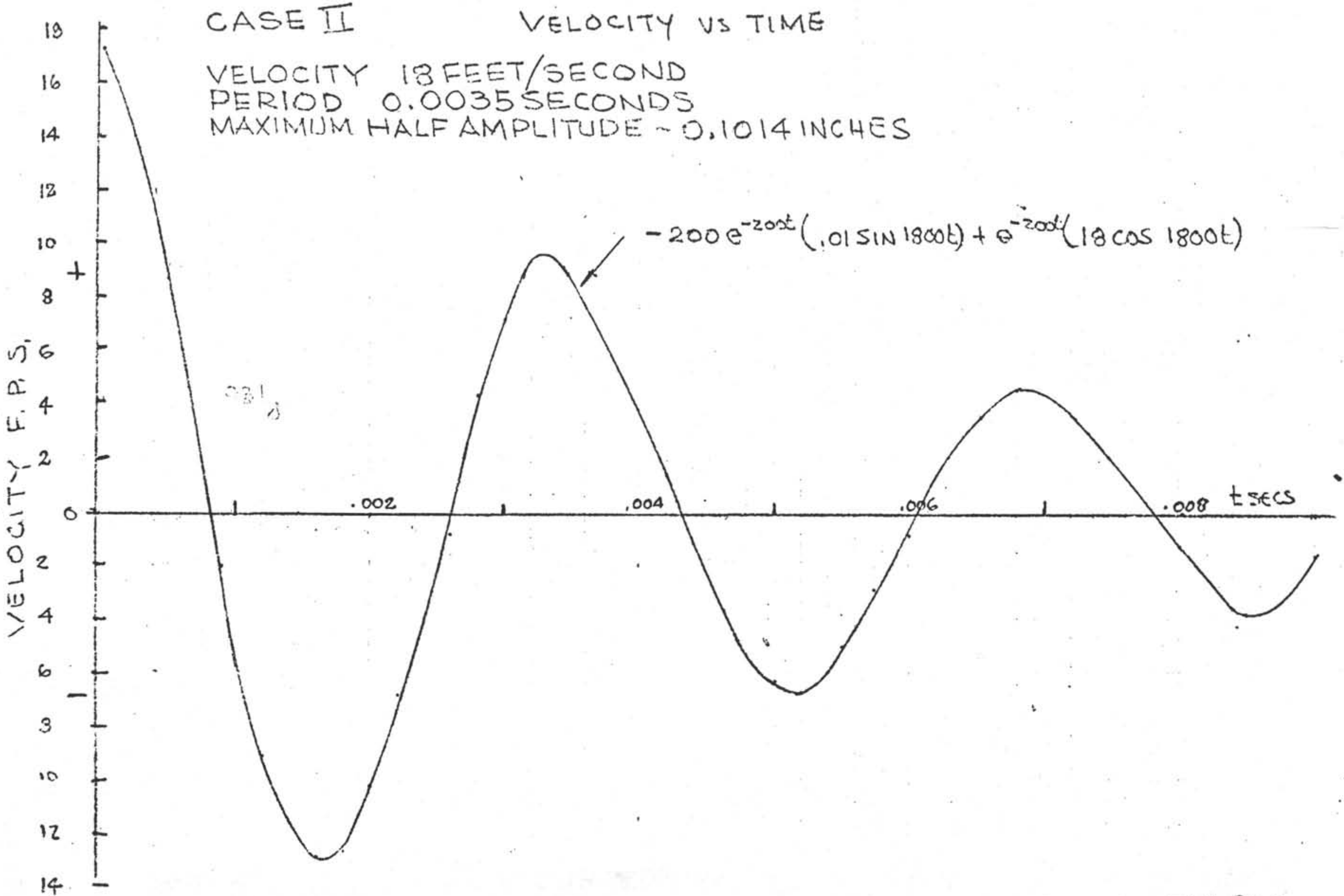

CASE II VELOCITY VS TIME

VELOCITY 18 FEET/SECOND
PERIOD 0.0035 SECONDS
MAXIMUM HALF AMPLITUDE ~ 0.1014 INCHES

FIGURE 2
W.N. 4-19-77

CASE III VELOCITY VS TIME

INITIAL VELOCITY 10 F.P.S
PERIOD 0.003 SECONDS

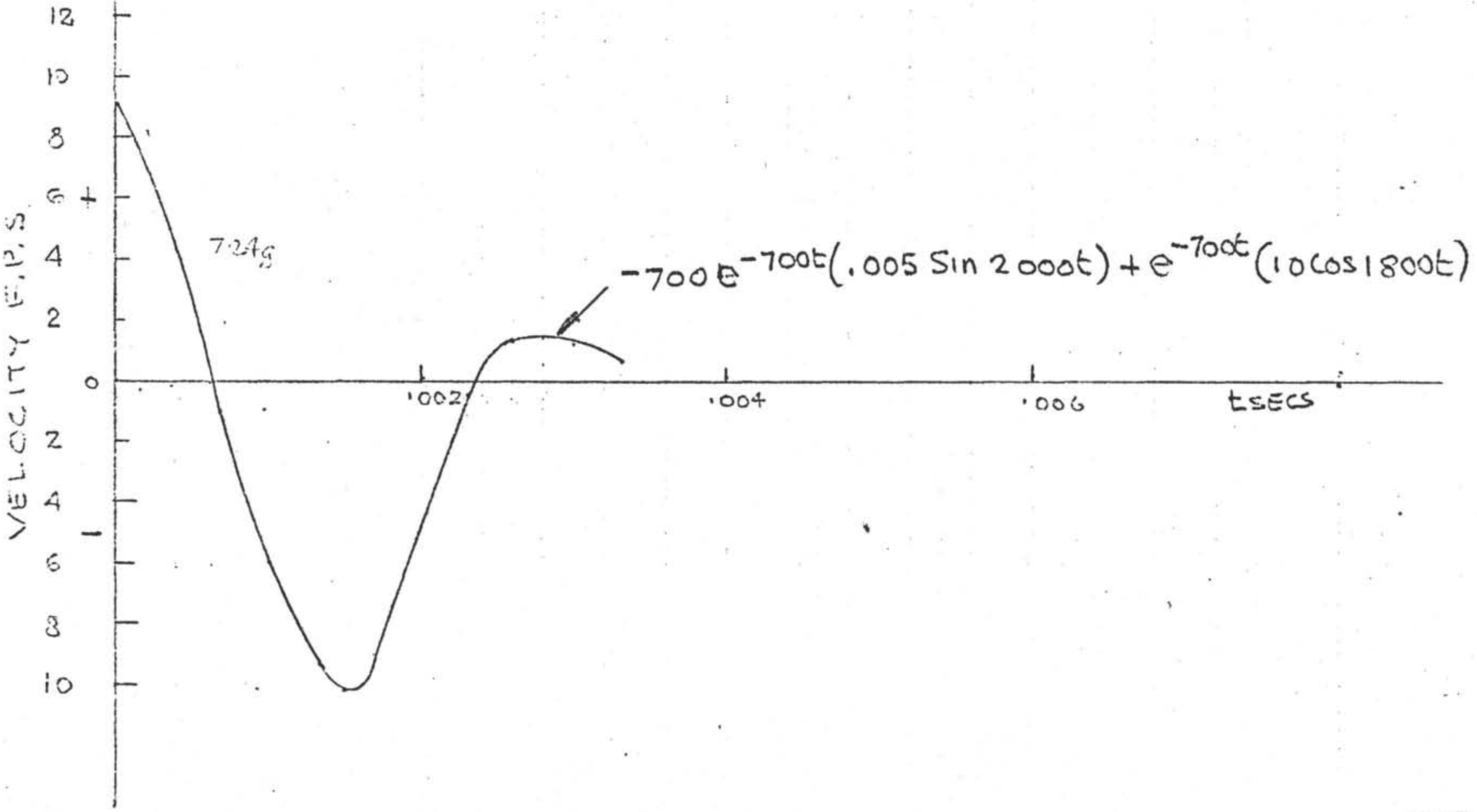

FIGURE 3
W.N 4-18-77

APRIL 19. 1977

MEETING WITH MR S.T. SEROCKI
MR BURT ADAMS
MR MICHAEL STORMS

SUBJECT CORE BARREL DROP TEST

1. DATA PRESENTED ROUGH DRAFT OF REPORT DSDP #.2

GENERAL CONCLUSION OF MEETING

FORCE OF IMPACT ~ 335,000 LB

THEORETIC G'S ~ 900 g

TRANSMITTED G'S ~ 90 g.

2. CORRECTION TO ESTIMATE FOR DETERMINING SPRING CONSTANT LIMIT THE ALLOWABLE STRESS AT THE FACE OF THE LANDING SUB & THE BEARING BLOCK TO 120,000 psi

THIS PRODUCES (120,000 × 1.35) 162,000 LB END FORCE

THE END FORCE 360 (400g)/1.35 = 106,666 PSI.

CASE <u>IV</u>

MASS OF CORE BARREL = 11.18 LBSEC²/F

ACCELERATION T.B.D.

DESCENT VELOCITY = 10 FT/SEC

SPRING RATE k = 18.84×10^6 LB/FT

DAMPING CONSTANT = 11952 LB-SEC/F

KE OF BARREL = $\frac{1}{2} m V^2$ = 560 FT LB.

DISPLACED VOLUME IN LOWER CHAMBER $\frac{3.5\pi}{4}(6)^2/(1728)$ = 0.033 FT³

PULSE PRESSURE IN LOWER CHAMBER = 16,733 PSF.

ANNULUS AREA = 0.001 FT²

LENGTH OF THE LOWER CHAMBER = 0.5 FT

FLOW VELOCITY THROUGH THE CONSTRICTION = 242 FT/SEC

FLOW THROUGH CONCENTRIC CYLINDERS $\Phi = \frac{d(c)^3 p}{l \nu s} \times 1.3 \times 10^{2}$ FT³/SEC

EQUIVALENT DISCHARGE AREA Cda $= \frac{\Phi}{\sqrt{\frac{2\Delta P}{\rho}}} = \frac{10.68}{130} = .082$

$$V = \frac{Cda}{A^{3/2}}\left(\frac{2g}{\sigma} \times F\right)^{1/2}; \quad F = \frac{V^2 A^3 \sigma}{(Cda)^2 (2g)}$$

DAMPING FORCE = 2988 LB. @ 0.5 FT IN .05 SECONDS

THEN DAMPING RATE = $\frac{2988 \text{ FORCE}}{\underset{\text{VEL}}{10}\underset{\text{TIME}}{(.5/10)}\underset{\text{DIST}}{(.5)}} = 11952 \frac{\text{LB-SEC}}{\text{FT}}$

(119520 LB / 10 FT/SEC

NUMERICAL ANALYSIS, CASE IV

$$x = Ae^{\alpha_1 t} + Be^{\alpha_2 t}.$$

$$c/m = 2a = 1069 \; ; \; k/m = b^2 = 16.85 \times 10^5$$

$$\text{let } a = 500 \; ; \; \text{Let } b = 1298$$

$$\alpha = -a \pm \sqrt{a^2 - b^2}.$$

$$= -500 \pm 1198.87i$$

THEN

$$x = Ae^{(-500+1200i)t} + Be^{(-500-1200i)t}$$

$$= e^{-500t}\left(Ae^{1200i} + Be^{-1200i}\right)$$

$$= e^{-500t}\left(C\cos 1200t + D\sin 1200t\right)$$

$$V = \frac{dx}{dt} = -500e^{-500t}\left(C\cos 1200t + D\sin 1200t\right)$$

$$+ e^{-500t}\left(-1200\,C\sin 1200t + 1200\,D\cos 1200t\right)$$

INITIAL CONDITIONS:

$$x = 0, \quad V = 10, \quad t = 0$$

WHEN $t = 0$, $x = 0$, AND $C = 0$

WHEN $t = 0$, $V = 10$ THEN $D = .0833$

$$x = e^{-500t}\left(.00833\sin 1200t\right)$$

$$\frac{dx}{dt} = -500e^{-500t}\left(.00833\sin 1200t\right) + e^{-500t}\left(10\cos 1200t\right)$$

$$\frac{d^2x}{dt^2} = 25 \times 10^4 e^{-500t}\left(.00833\sin 1200t\right) - 500e^{-500t}\left(10\cos 1200t\right)$$

$$-500e^{-500t}\left(10\cos 1200t\right) + e^{-500t}\left(-12000\sin 1200t\right)$$

PERIOD

$$T = 2\pi\sqrt{\frac{m}{k}}$$

$$= 5.22 \times 10^{-3} \text{ SECONDS}$$

CORE BARREL ASSEMBLY IMPACT CONDITION

A PREVIOUS DROP TEST OF A CYLINDRICAL SHAPED BODY WITH A POINTED SPIKE ON A FLAT STEEL PLATE PRODUCE A 700 g (0.4 MILLISECOND) HALF SINE WAVE PULSE THE SHOCK RESPONSE OF A SPRING MASS SYSTEM WAS CALCULATED BY THE FOLLOWING PROCEDURE

$f = \frac{1}{2\pi}\sqrt{\frac{k}{m}}$ NAT FREQ

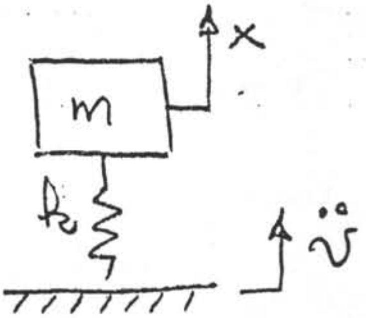

THE EQUATION OF MOTION IS

EQU(1) $m\left[\ddot{\delta}_x + \ddot{v}(t)\right] - k\delta x = 0$

WHERE $\ddot{\delta}_x$ IS THE RELATIVE ACCL $= (\ddot{X} - \ddot{v})$

$\ddot{v}$ IS THE INPUT ACCL $= \ddot{v}_{max} \sin\frac{\pi}{t}$ when $0 \leq t \leq \tau$

$= 0$ when $\tau \leq t$

τ IS THE ACCELERATION PULSE WIDTH IN SECONDS

THE SOLUTION OF EQU(1) IS:

EQU(2) $\delta_x = \xi_p \frac{1}{1 - T^2/4\tau^2}\left(\sin\frac{\pi t}{\tau} - \frac{T}{2\tau}\sin\omega_n t\right) \; [0 \leq t \leq \tau$

EQU(3) $\delta_x = \xi_p \frac{(T/\tau\cos(\pi\tau/T))}{(T^2/4\tau^2) - 1}\sin\omega(t - \tau/2) \; [\tau \leq t$

WHERE ξ_p IS THE STATIC DEFLECTION OF THE MASS ASSUMING A STEADY LOAD

δ_x IS MAXIMUM WHEN $t > \tau$

T IS $\frac{1}{f_n}$

ASSUMPTION. LET THE INSTRUMENT PACKAGE WEIGH 85 LB. AND THE POTTING COMPOUND HAVE A COMPRESSIVE YIELD = 3,000 psi THE SUPPORT AREA = 1 SQ INCH AND THE TOTAL DEFLECTION BE .05 INCHES FOR THE APPLIED STATIC LOAD OF 3000 LB

$f = \frac{1}{2\pi}\sqrt{\frac{72 \times 10^4}{2.63}} = 83.2$ Hz

IF THE CORE BARREL AND THE BOTTOM DRILL COLLAR(S) ARE CONSIDERED AS A SPRING MASS SYSTEM CASE III PRODUCING A 1.6 MILLISECOND 900g HALF SINE WAVE PULSE, THE INSTRUMENT RECEPTICLE DEFLECTS .05 BY A 6000LB STATIC LOAD ∴ 6000/80 = 75 GRAVITIES

$f = \overset{80}{83.2}$ Hz. $T = .01304$ SECONDS

$\tau = .0016$ MILLISECOND ; $T/\tau = 8.15$

$$\omega_n = \frac{2\pi}{T}$$

$$= \sqrt{\frac{k}{m}}$$ NATURAL FREQUENCY RADS/SEC

EQU (4) $$\delta_{MAX} = \xi_p \frac{7.37 \cos(\pi \, 7.87)}{(.0123)^2/(4(.0016)^2) - 1} \sin\left(\frac{2\pi}{T}\left[t - \tau/2\right]\right. \quad [\tau \le t$$

$$= .03463 \, \xi_p$$

LOOK FOR MAXIMUM PRODUCED BY FUNCTIONS OF t

$\sin\left(\frac{2\pi}{T}\left[t - \frac{\tau}{2}\right]\right.$ LET THIS = 1 IF

THEN $\sin\left(\frac{\pi}{2}\right)$ IS PROBABLY A MAXIMUM $\frac{2\pi}{T}\left[t - \tau/2\right] = \frac{\pi}{2}$

AND $t = \frac{\pi}{2}\left(\frac{T}{2\pi}\right) + \frac{\tau}{2}$ $\sin\frac{\pi}{2} = \sin\left(\frac{2\pi}{T}\left[t - \frac{\tau}{2}\right]\right.$

$t = .00391$

$t = \frac{T}{4} + \frac{\tau}{2}$

.00326
.0008
.00406

$31.16 < \overset{3}{.03463}(900)$

$31.16 < 35.29$

W. Nugent 10.12.79

1, FREQU. OF COLUMN AT IMPACT

$$f = \frac{1}{2\pi}\sqrt{\frac{k}{m}} = \frac{1}{2\pi}\sqrt{\frac{19\times10^6}{11.18}} = 207\text{ Hz}$$

ESTIMATE ⟶ RANGE ~ 200 TO 400 Hz

2, TRANSVERSE BENDING FREE FREE BEAM

$$f = \frac{1}{2\pi}a_n\sqrt{\frac{EI}{\mu l^4}}$$

WHERE $a_{n=2} = 61$
$a_{n=3} = 131$
$a_{n=5} = 298.2$
$\mu = W/gl = 2.588\times10^{-3}$
$l = 360$ INCHES
$W = 360$
$g = 386.4\ \text{in/sec}^2$

REF DEN HARTOG
P. 432

$$\text{2ND MODE} = \frac{61}{2\pi}(1.6476) \boxed{= 16\text{ Hz}}$$

$$\text{3 MODE} = \frac{131}{2\pi}(1.6476) \boxed{= 34\text{ Hz}}$$

$$\text{5TH MODE} = \frac{298.2}{2\pi}(1.6476) \boxed{= 78\text{ Hz}}$$

3. ANALYSIS USING ANALOGY OF A WATER COLUMN IN A CLOSED PIPE
REFERENCE MECHANICAL VIBRATION DEN HARTOG. P. 431

$$f = (1 + 2n)\frac{14{,}200}{l}$$

2ND MODE	~	200 Hz
3RD MODE	~	276 Hz
5TH MODE	~	434 Hz

4. IMPACT CONDITIONS

K.E = 560 FT LB ; DEFLECTION AT CONTACT ~ .01 FT

ESTIMATE AREA UNDER CURVE = KE
THEN FORCE = 2(560/.01) = 112,000 LB
ACCELERATION g's = 112 000/360 = 311 g

5, TRANSMISSIBILITY

$$K_T = \sqrt{\frac{1+\left(2\frac{c}{c_c}\frac{\omega}{\omega_n}\right)^2}{\left(1-\frac{\omega^2}{\omega_n^2}\right)^2+\left(2\frac{c}{c_c}\frac{\omega}{\omega_n}\right)^2}}$$

W. Nugent 10.12.79

FROM THE TRANSMISSIBILITY EXPRESSION IT IS SEEN THAT THE TRANSMISSIBILITY IS INFINITE AT RESONANCE

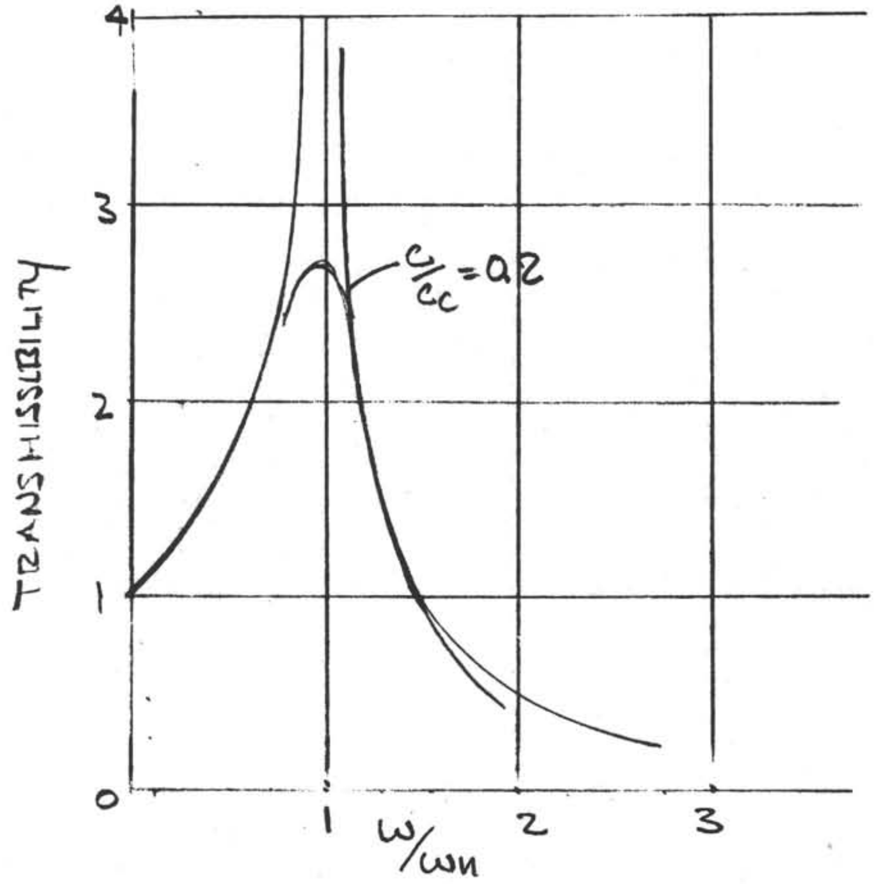

FROM ANALYSIS AND TEST THE DAMPING RATE IS SMALL THE FREQUENCY RATIO ω/ω_n APPEARS TO BE ~ 0.95 AS A CONSEQUENCE THE CONDITIONS ARE NEAR RESONANCE

CONSIDER THE DAMPING RATIO $c/c_c = 0.2$ $\quad \omega/\omega_n \sim 1.0$

$$K_T = \sqrt{\frac{1+(2(0.2))^2}{(2.(0,2))^2}} = 2.693$$

WHEN $c/c_c = 0.15$ $\quad K_T = 3.5$

W. Nugent 10.17.79

CONCLUSIONS:

1. FROM THIS AND PREVIOUS ANALYSIS IT IS SEEN THAT THE IMPACT CONDITIONS APPROACH OR EXCEED THE BOUNDARY CONDITIONS (500g AND 5MS PULSE – 3000g 1MS PULSE) OF THE ACCELEROMETER.

NOTE ! 311g AND 4.85 MS HALF SINE PULSE AT IMPACT THIS CASE.
930g AND 1.6 MS " ———— " CASE II STUDY
∼400g AND 2.0 MS " - ———— " CASE IV STUDY

THE TRANSMISSIBILITY ∼ 2.5 TO 3 COULD PRODUCE ∼ 1000g

THE VIBRATION DUE TO FLOW THROUGH DURING DESCENT 200-400 HZ IT IS NOT APPARENT THE THE LOAD FACTOR WOULD BE EXCEED IN THIS CASE

WITHOUT SPECIAL HANDLING & OR SHOCK & VIBRATION PROTECTION THERE APPEARS TO BE HIGH RISK DEPLOYING THE INSTRUMENT PACKAGE (PARTICULARLY THE ACCELEROMETER) IN THIS ENVIRONMENT

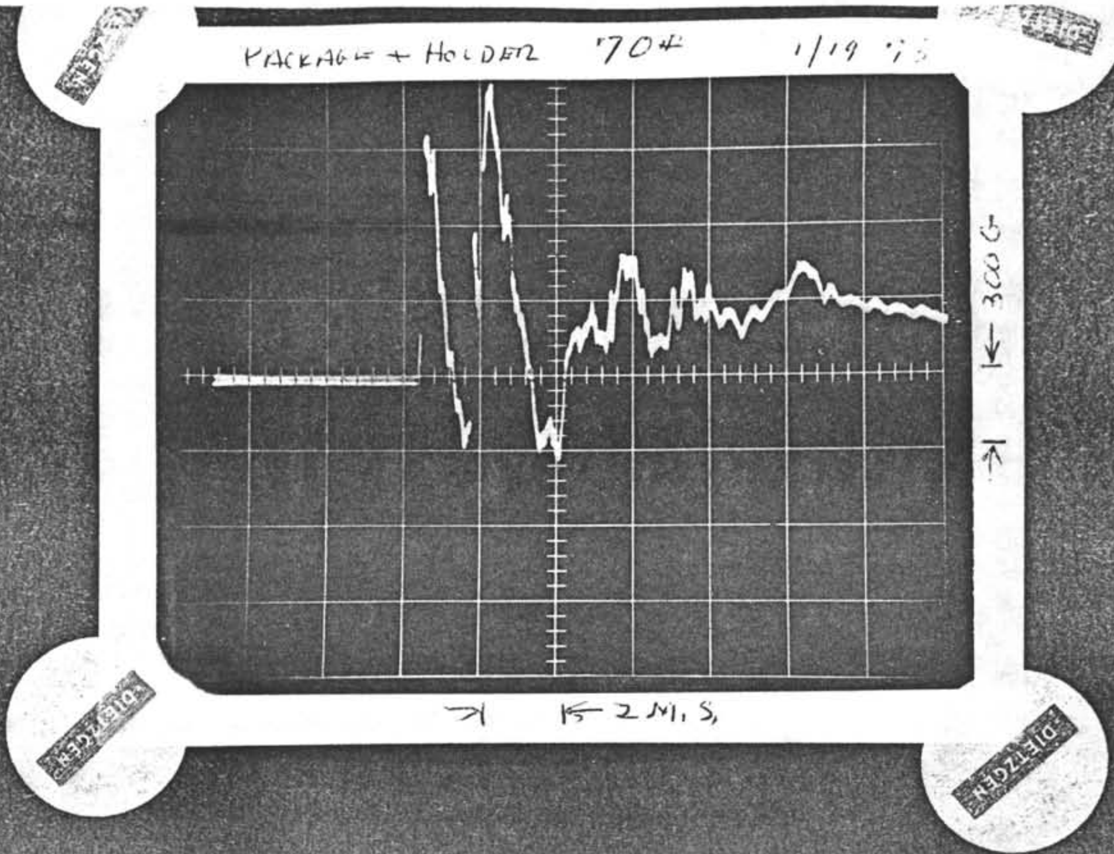

PACKAGE + HOLDER 70# 1/19 75

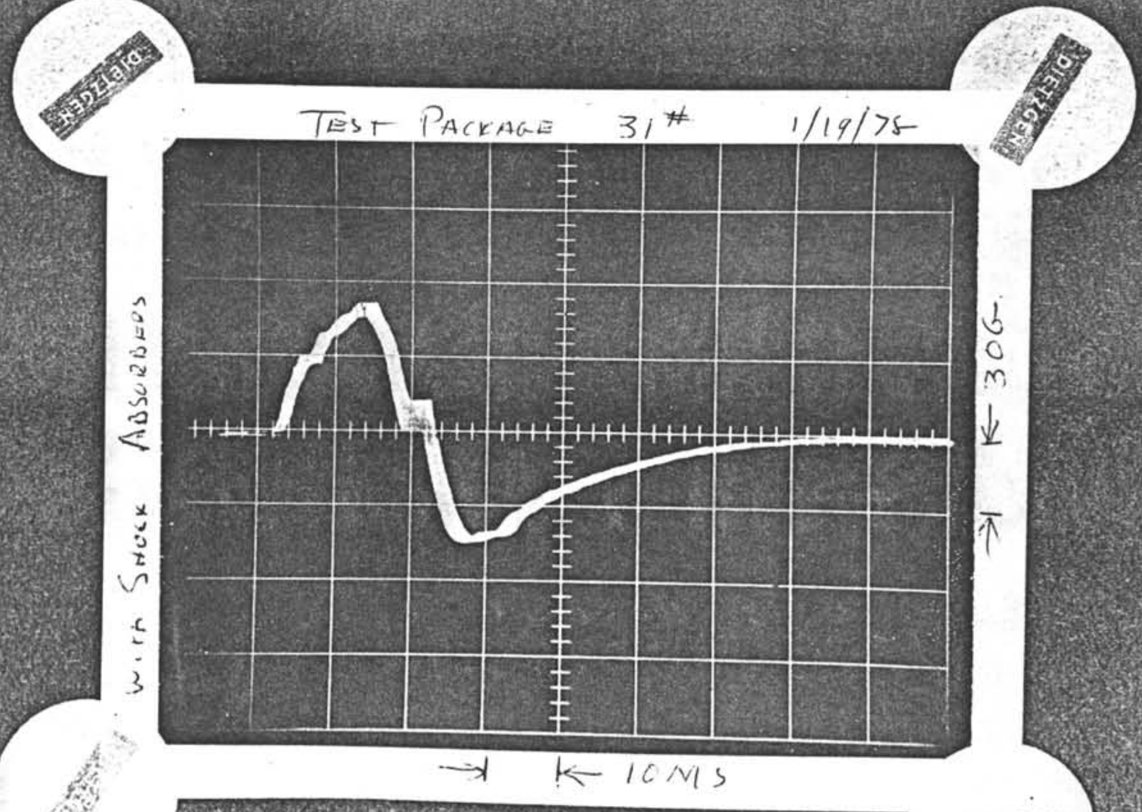

TEST PACKAGE 31# 1/19/75

WITH SHOCK ABSORBERS

VARIABLE LENGTH HYDRAULIC PISTON CORER (VLHPC)

PARTS LIST AND ASSEMBLY DRAWINGS

VARIABLE LENGTH HYDRAULIC PISTON CORER (VLHPC)
PARTS LIST - COMPONENTS

PART NUMBER	DESCRIPTION	DRAWING NUMBER
OL 1019	Seal Sleeve	B-1030
	TOP SUB ASSEMBLY	N/A
OP 4309	Top Sub Cap	R-OP4309
OP 4307	Top Sub Body	B-OP4307
OP 4156	Male Adapter F/Top Sub	A-1264
OP 4157	Female Adapter F/Top Sub	A-1256
OP 4155	V-Spacer F/Top Sub	A-1266
	SWIVEL ASSEMBLY	N/A
OP 4365	Inner Swivel Body	B-OP4365
OP 4366	Swivel Retainer	B-OP4366
OP 4367	Outer Swivel Body	B-OP4367
	SHAFT ASSEMBLY	
OP 4329	Bypass Sub (7/32")	R-OP4329
OP 4317	Shear Bushing (7/32) F/Bypass Sub	A-OP4317
OP 4314	Shaft Connector	B-OP4314
OP 4320	4.5 m Shaft Link	B-OP4320
OP 4354	3.0 m Shaft Link	B-OP4354
OP 4355	Lower Shaft	B-OP4355
	INNER SEAL SUB ASSEMBLY	N/A
OP 4150	Inner Seal Sub	B-0927-0
OP 4151	Inner Seal Retainer	B-0928
OP 4324	Male Adapter F/Inner Seal Sub	A-OP4323
OP 4325	Female Adapter F/Inner Seal Sub	A-OP4325
OP 4326	V-Spacer F/Inner Seal Sub	A-OP4326
	PISTON ROD ASSEMBLY	N/A
OP 4364	Upper Piston Rod	B-OP4364
OP 4371	4.5 m Piston Rod Link	B-OP4371
OP 4335	3.0 m Piston Rod Link	B-OP4335
OP 4341	Rod Connector	A-OP4341
OP 4344	Lower Piston Rod	B-OP4344
	PISTON HEAD ASSEMBLY	N/A
OP 4381	Q-R Piston Head	B-OP4381
OP 4345	Q-R Piston Seal Retainer	A-OP4345
OP 4383	Lock Pin - Piston	A-OP4383
OP 4390	Male Adapter F/Piston Head	A-OP4390
OP 4391	Female Adapter F-Piston Head	A-OP4391
OP 4392	V-Spacer F/Piston Head	A-OP 4392

VARIABLE LENGTH HYDRAULIC PISTON CORER (VLHPC)
PARTS LIST - COMPONENTS
Continued

PART NUMBER	DESCRIPTION	DRAWING NUMBER
	SHEAR PIN ASSEMBLY	N/A
OP 4312	Sleeve - Outer Body Cap	A-OP4312
OP 4310	Sleeve Ring - Outer Body Cap	A-OP4310
OP 4321	Outer Body Cap (7/32)	A-OP4321
OP 4318	Shear Bushing (7/32) F/Outer Body Cap	A-OP4318
OP 4357	7/32" Dia. Shear Pin	A-OP4357
	OUTER BODY ASSEMBLY	N/A
OP 4313	Outer Body Vent	B-OP4313
OP 4343	4.5 m Outer Body Link	B-OP4343
OP 4356	3.0 m Outer Body Link	B-OP4356
OP 4328	Lower Outer Body	B-OP4328
	OUTER SEAL SUB ASSEMBLY	N/A
OP 4160	Outer Seal Sub	C-0921
OP 4363	Outer Seal Retainer	A-OP4363
OP 4394	Male Adapter F/Outer Seal Sub	A-OP4394
OP 4395	Female Adapter F/Outer Seal Sub	A-OP4395
OP 4396	V-Spacer F/Outer Seal Sub	A-OP4396
	QUICK DISCONNECT ASSEMBLY	N/A
OP 3055	Q/R Shoulder Sub	R-OP3055
OP 4338	Q/R Cap Sub	C-OP4338
OP 4337	Sleeve - Q/R Shoulder Sub	B-OP4337
OP 4340	Dogs - Q/R Shoulder Sub	B-OP 4340
	INNER BARREL ASSEMBLY	N/A
OP 4342	Upper Liner Seal Sub	B-OP4342
OP 3210	4.5 m Inner Core Barrel	B-WL-21
OP 4353	3.0 m Inner Core Barrel	B-OP4353
OP 4360	Lower Liner Seal Sub	B-OP4360
OP 3400	Core Liner	A-1230
OP 4382	Plastic Tube Support (VLHPC)	A-OP4382
	CORE CATCHER ASSEMBLY	N/A
OP 4376	Catcher Sub	B-OP4376
OP 4109	Spring, Flapper Core Catcher	A-1290
OP 4112	Flapper, Flapper Core Catcher	B-1296
OP 4113	Cylinder, Flapper Core Catcher	B-1297
OR 7020	Dog (8) Type Core Catcher	A-0191

VARIABLE LENGTH HYDRAULIC PISTON CORER (VLHPC)
PARTS LIST - WIRELINE

PART NUMBER	DESCRIPTION	DRAWING NUMBER
OP 4347	Single Shot Pressure Case	B-OP4347
OP 4350	Single Shot Top Plug F/Pressure Case	B-OP4350
OP 4349	Single Shot Bottom Plug F/Pressure Case	B-OP4349
OP 4358	Pipe Plug F/Bottom Plug	A-OP4358
OP 4351	Non-Magnetic Sinker Bar	B-OP4351

KUSTER SINGLE SHOT ASSEMBLY	KUSTER P/N
0-20 Angle Unit (short)	2299-101
Battery Case, 5 Cell*	4030-105
Electronic Timer**	3600-101
Main Frame, Short	4100-102
Spacer Tube, Short	4104-101
E.T. Test Sleeve	3601-000
Anchor	6221-001
Plug	6221-002
Tang	6221-003
Anchor Screw	6221-004
Set Screw	791-049
Nose Spring 6"	6221-001
O-Ring	6205-001
Film Disc Loader	4301-100
Developing Tank	4401-100
Carrying Case - S.S.	4600-000
Disco Reader	4602-000
Orientation Reader	4604-000
Non-Steel Jacketed Batteries (1.5 V C-size (Hot Shot Prod. Col.)	- - - -

*Battery Case, 3-Cell	4030-103
**Clock, 90 minutes	3201-101
Flash Unit	4025-101

VARIABLE LENGTH HYDRAULIC PISTON CORER (VLHPC)
PARTS LIST - SET SCREWS, ETC.

PART NUMBER	DESCRIPTION	DRAWING NUMBER
OP 4302	1/2-13 x 3/4 Socket Set Screw F/Top Sub Cap	A-OP4302
	1/2-13 x 3/4 Socket Set Screw F/Q.R. Sleeve	A-OP4302
OP 4301	1/2-20 x 3/4 Socket Head Cap Screw F/Overshot Alignment	A-OP4301
OP 4369	5/8-11 x 1/2 Socket Set Screw F/Outer Swivel Body	A-OP4369
OP 4361	3/8-16 x 3/8 Socket Set - Half Dog Core Liner Retainer Screw F/Upper Liner Seal Sub	A-OP4361
OP 4185	3/8-16 x 3/8 Socket Set Screw F/4.5 m Shaft Link	A-1471
	3/8-16 x 3/8 Socket Set Screw F-3.9 m Shaft Link	A-1471
	3/8-16 x 3/8 Socket Set Screw F/Inner Seal Sub	A-1471
	3/8-16 x 3/8 Socket Set Screw F/Lower Outer Body	A-1471
	3/8-16 x 3/8 Socket Set Screw F/Outer Shaft	A-1471
	3/8-16 x 3/8 Socket Set Screw F/Outer Seal Sub	A-1471
	3/8-16 x 3/8 Socket Set Screw F/Swivel Retainer	A-1471

NOTE: All set screws are alloy steel with cadmium plating and nyloc locking.

VARIABLE LENGTH HYDRAULIC PISTON CORER (VLHPC)
PARTS LIST - ANCILLARY TOOLS

PART NUMBER	DESCRIPTION	DRAWING NUMBER
OP 4192	Hang Off Plate	B-0942
OP 4330	Sighting Bar - Baseline Orientation	C-OP4330
OP 4331	Telescope Frame - Baseline Orientation	C-OP4331
OP 4332	Sighting Bar Reducer	B-OP4332
OP 4334	Orientation Hold Down Strap	A-OP4334
OP 4389	Drill Jig - Core Liner Orientation Lock	A-OP4389
OP 4327	Quick Release Nose Guard	R-OP4327
OP 4384	Assembly Bar for Swivel Assembly	A-OP4384
	Face Spanner Wrench F/Outer Seal Retainer Assembly	
	Parmelee Wrench (1.25 dia) F/Piston Rod Assembly	
	Parmelee Wrench (2.18 dia) F/P Case Assembly	
OP 3615	HPC - Handling Clamp	C-OP3615
	Non-Magnetic Drill Collar	
	Magnetic Pickup & Stud Finder (Craftsman 94001)	
	Spanner Wrench	
OP 4305	Seal Installation Tool-Single Shot Pressure Case	A-OP4305
OC 1080	XCB Core Bit (10 7/32 x 3 13/16)	D-1694
OP 4333	Core Orientation Baseline Adjustment	B-OP4333

VARIABLE LENGTH HYDRAULIC PISTON CORER (VLHPC)
PARTS LIST - ANCILLARY DRAWINGS

PART NUMBER	DESCRIPTION	DRAWING NUMBER
OP 4300	Variable Length Hydraulic Piston Corer Assembly	R-OP4300
OP 4311	VLHPC System Schematic	C-OP4311
OP 4348	VLHPC Single Shot Assembly	R-OP4348

VARIABLE LENGTH HYDRAULIC PISTON CORER (VLHPC)
PARTS LIST - SEALS, O-RINGS, BACK-UP RINGS

PART NUMBER	DESCRIPTION	VENDOR NUMBER
OP 4158	Top Sub Seal (3.63 x 2.87)	37502850VP
OP 4154	Inner Seal Sub Seal (2.87 x 2.25)	31202250VP
OP 4393	Outer Seal Sub Seal (1.87 x 1.25)	31201250VP
OP 4179	Piston Head Seal (2.00 x 2.62)	31202000VP
OP 4148	O-Ring F/Shaft Connectors	2-326
	O-Ring F-Alternate Bypass Sub - 7/32	2-326
	O-Ring F/Inner Seal Sub	2-326
OP 4165	O-Ring F/Outer Seal Sub	2-231
OP 4147	O-Ring F/Upper Liner Seal Sub	2-232
	O-Ring F/Lower Liner Seal Sub	2-232
OP 4306	O-Ring F/Single Shot Bottom Plug	2-324
	O-Ring F/Single Shot Top Plug	2-324
OP 4385	Parbac F/Single Shot Bottom Plug	8-324
	Parbac F/Single Shot Top Plug	8-324
OP 4303	Polypac F/Inner Swivel	18702375
OP 4304	Polypac Alt. F/Single Shot Top & Bottom Plugs	18701375

REVISIONS					
NO.	DESCRIPTION	DATE	BY	CH.	APR
1	CONCENTRICITY NOTE ADDED	7-6-71	[illegible]		[illegible]
2	4.49 DIA DIMENSION ADDED	7-24-71	[illegible]		
3	, PARKOLUBRITE FIN.	8-2-71	[illegible]	[illegible]	

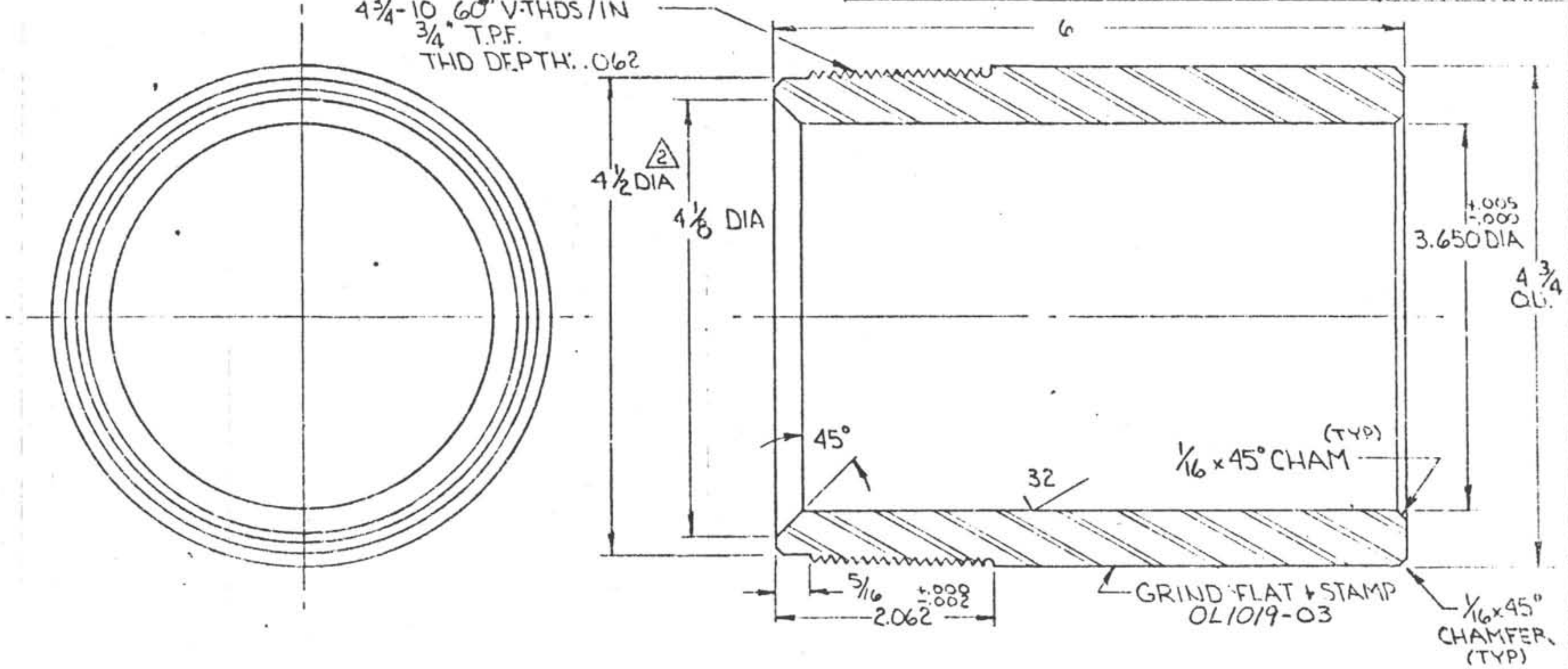

CONCENTRICITY
ALL DIAMETERS
TIR .003

NOTE:
BREAK ALL SHARP EDGES
RADIUS ALL INSIDE CORNERS

TOLERANCES UNLESS NOTED FRACTIONS ± 1/64 DECIMALS ± .005 ANGLES ± 1/2° CORNERS 1/64 x 45° or 1/64 R FINISH 125 ✓	DEEP SEA DRILLING PROJECT SCRIPPS INSTITUTION OF OCEANOGRAPHY UNIVERSITY OF CALIFORNIA, SAN DIEGO LA JOLLA, CALIFORNIA 92093				
	TITLE SEAL SLEEVE ~ HPC				
SURFACE TREATMENT PARKOLUBRITE	MATERIAL [illegible] STEEL	DRAWN BY [illegible]	DATE [illegible]	CHECKED [illegible]	APPROVED [illegible]
HEAT TREATMENT 30-32 Rc	PART NO. OL1019-03	SIZE DWG. NO. B - 1030 -			REV. 3

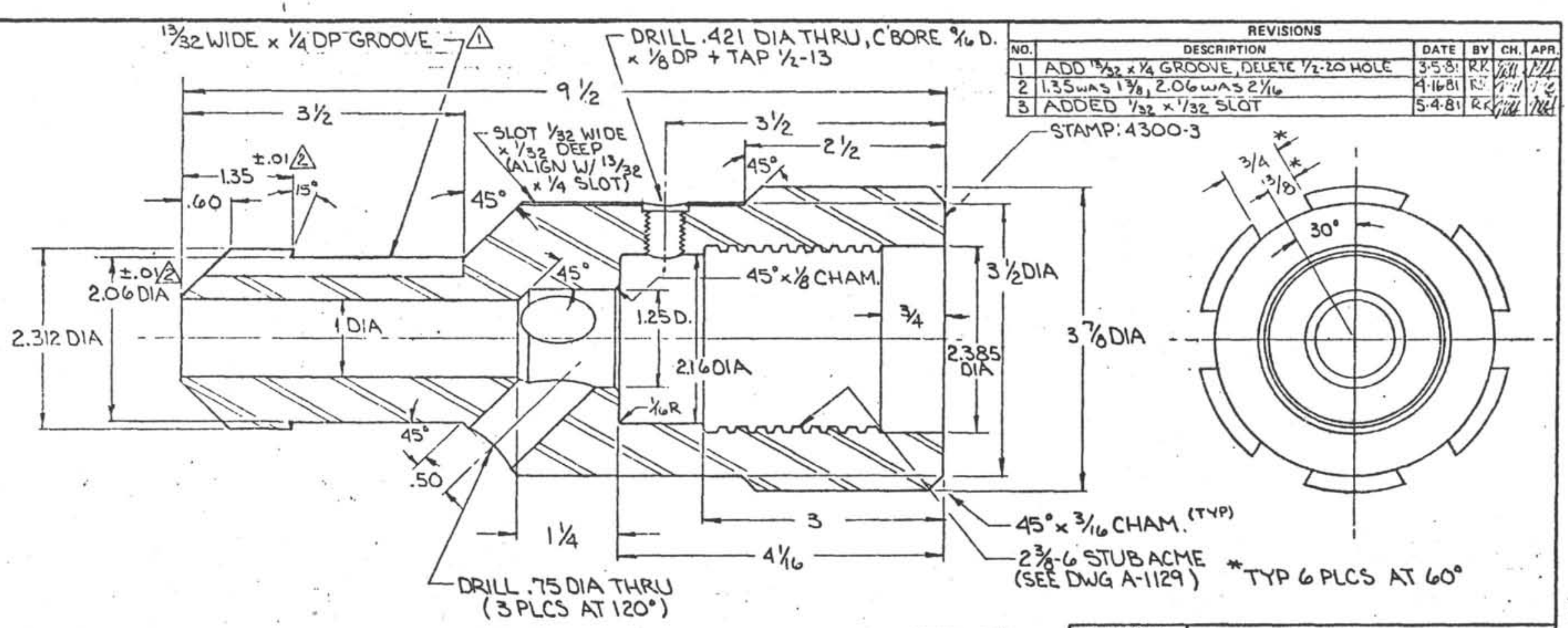

REVISIONS					
NO.	DESCRIPTION	DATE	BY	CH.	APR.
1	ADD 13/32 x 1/4 GROOVE, DELETE 1/2-20 HOLE	3-5-81	RK		
2	1.35 WAS 1 3/8, 2.06 WAS 2 1/16	4-16-81	RK		
3	ADDED 1/32 x 1/32 SLOT	5-4-81	RK		

CONCENTRICITY:
ALL DIAMETERS
TIR .003

NOTE:
BREAK ALL SHARP EDGES
RADIUS ALL INSIDE CORNERS

TOLERANCES UNLESS NOTED FRACTIONS ± 1/64 DECIMALS ± .005 ANGLES ± 1/2° CORNERS 1/64 x 45° or 1/64 R FINISH 125	**DEEP SEA DRILLING PROJECT** SCRIPPS INSTITUTION OF OCEANOGRAPHY UNIVERSITY OF CALIFORNIA, SAN DIEGO LA JOLLA, CALIFORNIA 92093				
	TITLE TOP SUB CAP ~VL-H.P.C~				
SURFACE TREATMENT PARKOLUBRITE	MATERIAL 4140	DRAWN BY R.K	DATE 17 JAN	CHECKED	APPROVED
HEAT TREATMENT 30-32 Rc	PART NO. OP 4309-3	SIZE DWG. NO. R-OP4309-			REV. 3

]

REVISIONS

NO.	DESCRIPTION	DATE	BY	CH.	APR.
1	ADD 3.25, 2.125 WAS 2 1/8	4-16-81	RK		
2	3.25 MISDIMENTIONED	6-18-82	RK		

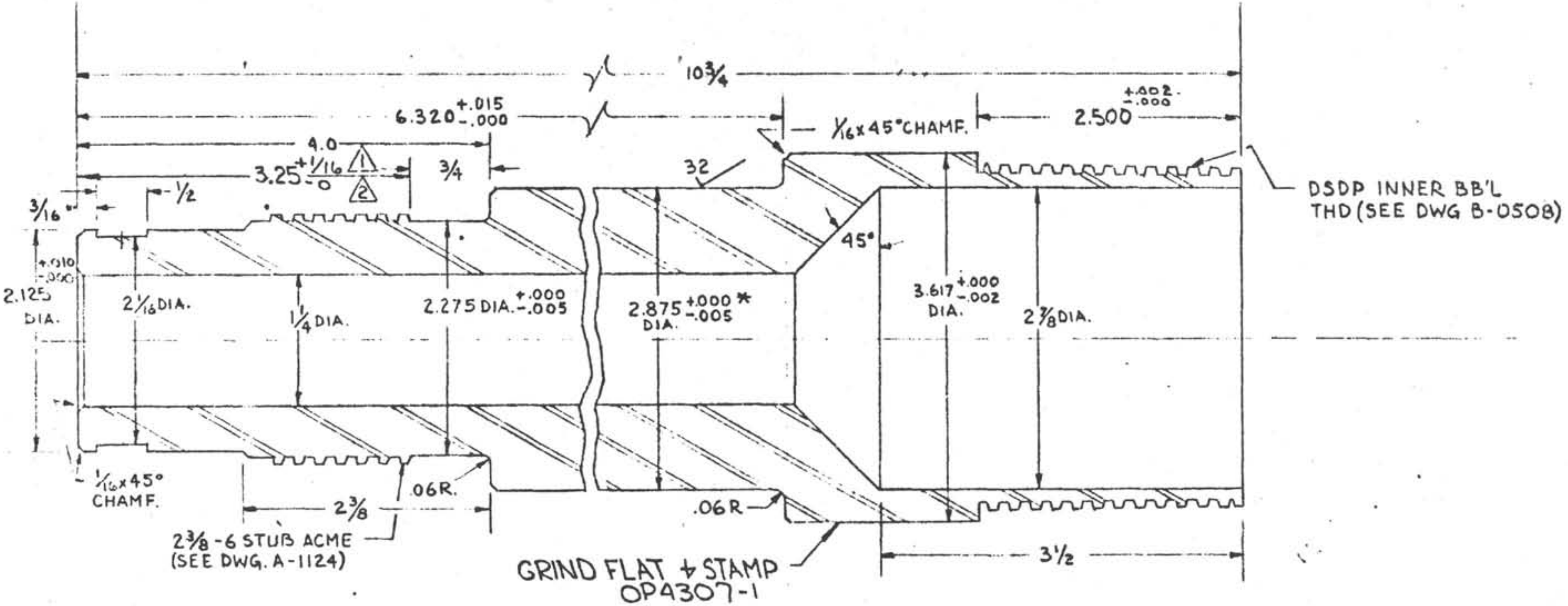

*FOR V-PACKING 3750285-VP (PART NO. OP4306)

CONCENTRICITY:
ALL DIAMETERS
TIR .003

NOTE:
BREAK ALL SHARP EDGES
RADIUS ALL INSIDE CORNERS

TOLERANCES UNLESS NOTED
FRACTIONS ± 1/64
DECIMALS ± .005
ANGLES ± 1/2°
CORNERS 1/64 x 45° or 1/64 R
FINISH 125

DEEP SEA DRILLING PROJECT
SCRIPPS INSTITUTION OF OCEANOGRAPHY
UNIVERSITY OF CALIFORNIA, SAN DIEGO
LA JOLLA, CALIFORNIA 92093

TITLE: TOP SUB BODY
VLHPC

SURFACE TREATMENT PARCOLUBRITE	MATERIAL 4130 ST.	DRAWN BY LH	DATE 7/15/80	CHECKED RK	APPROVED BL/A
HEAT TREATMENT Rc 32-34	PART NO. OP4307-2	SIZE DWG. NO. B-OP4307-			REV. 2

REVISIONS

NO.	DESCRIPTION	DATE	BY	CH.	APR.
1	.348 WAS 7/16, .567/21/32, .379/15/32	1-26-81	RK	[illegible]	[illegible]

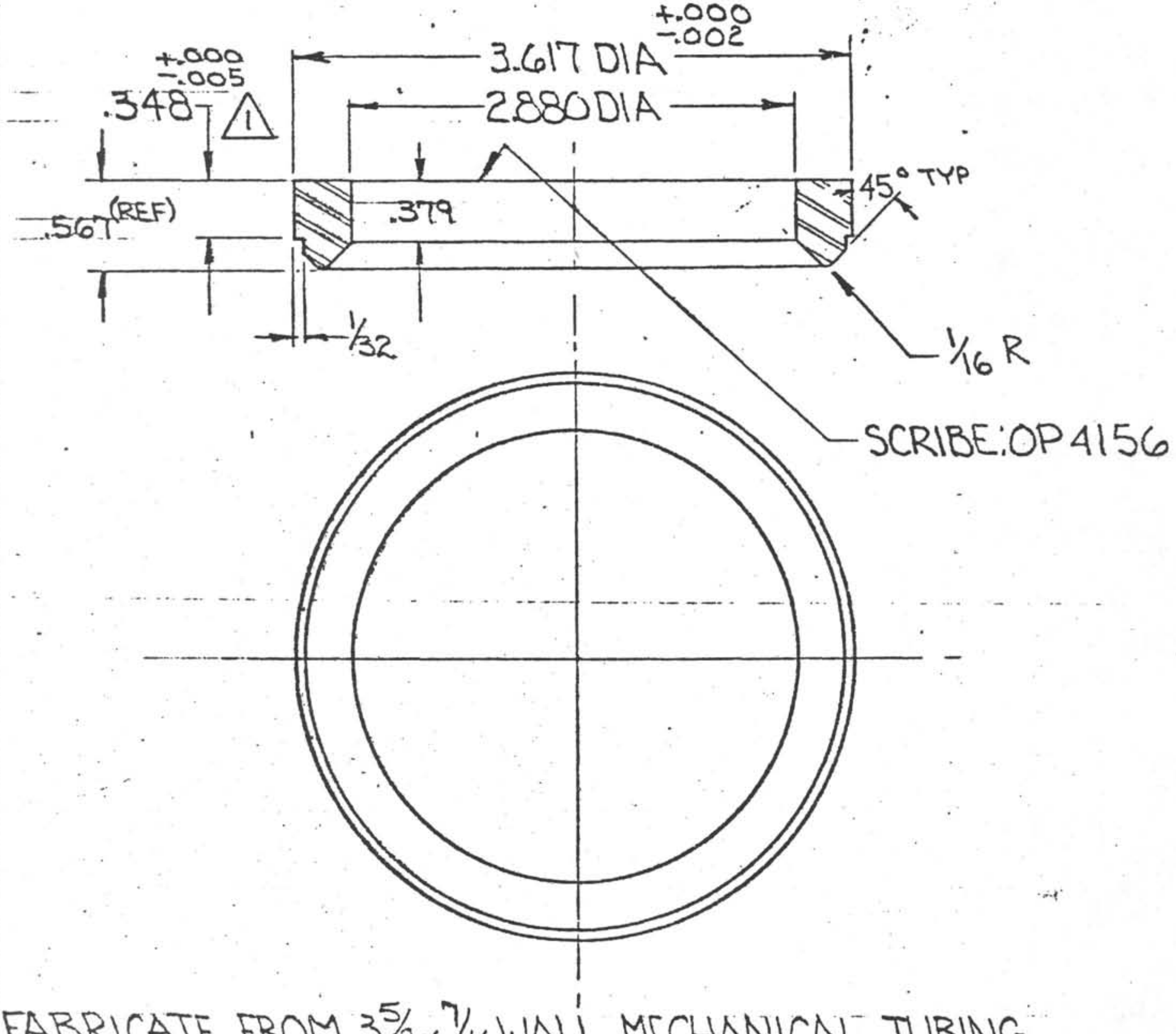

FABRICATE FROM 3 5/8 x 7/16 WALL MECHANICAL TUBING

TOLERANCES UNLESS NOTED FRACTIONS ± 1/64 DECIMALS ±.005 ANGLES ± 1/2° CORNERS 1/64 x 45° or 1/64 R FINISH 125	DEEP SEA DRILLING PROJECT SCRIPPS INSTITUTION OF OCEANOGRAPHY UNIVERSITY OF CALIFORNIA, SAN DIEGO LA JOLLA, CALIFORNIA 92093				
	TITLE MALE V-PACKING ADAPTER ~H·P·C~ (TOP SUB)				
SURFACE TREATMENT	MATERIAL 304 S.S.	DRAWN BY RK	DATE 9-28-79	CHECKED	APPROVED
HEAT TREATMENT ANNEALED	PART NO. OP 4156-1	SIZE A	DWG. NO. 1264-		REV. 1

REVISIONS					
NO.	DESCRIPTION	DATE	BY	CH.	APR.

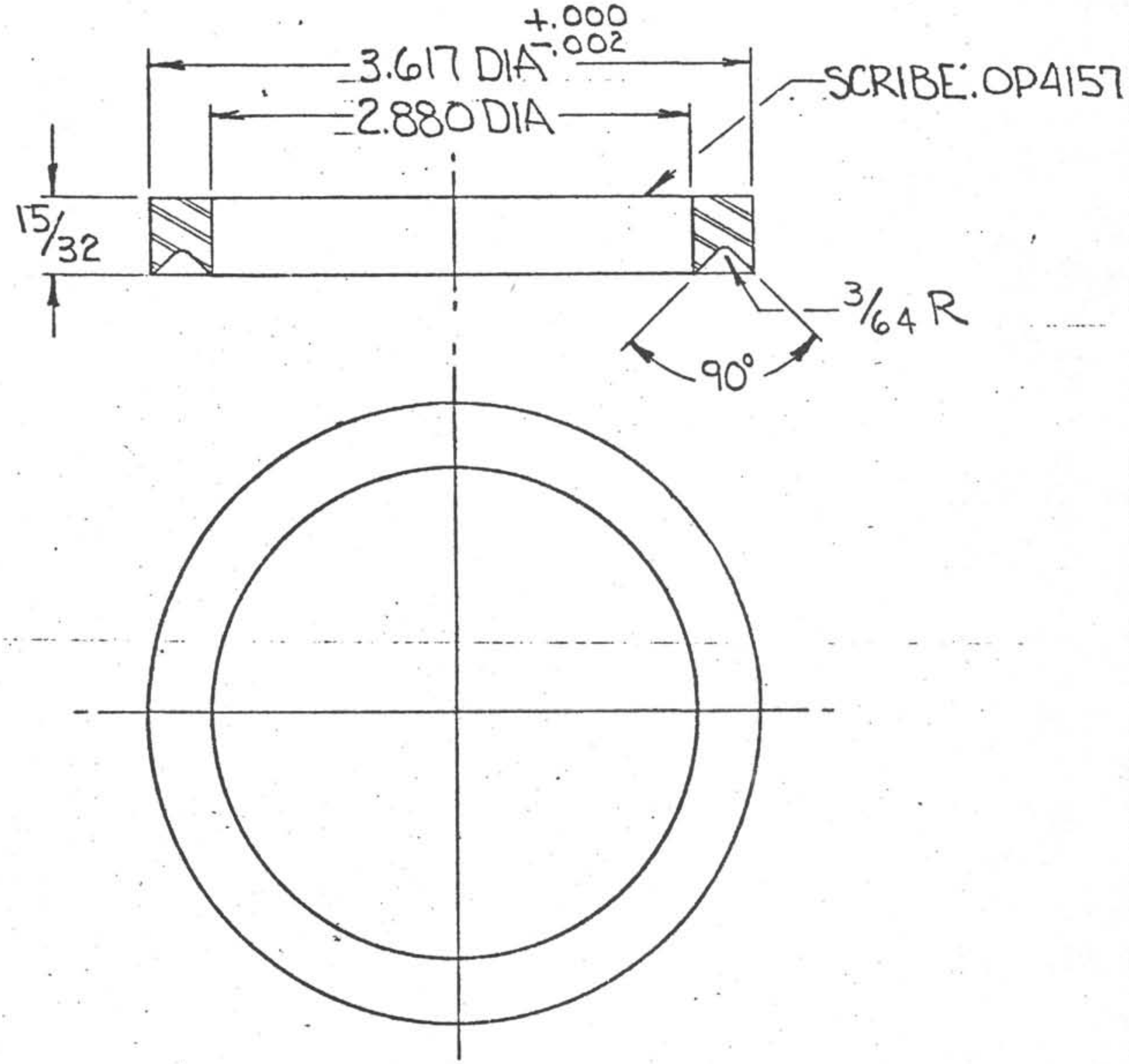

FABRICATE FROM 3 5/8 x 7/16 WALL MECHANICAL TUBING

TOLERANCES UNLESS NOTED
FRACTIONS ± 1/64
DECIMALS ± .005
ANGLES ± 1/2°
CORNERS 1/64 x 45° or 1/64 R
FINISH 125 ✓

DEEP SEA DRILLING PROJECT
SCRIPPS INSTITUTION OF OCEANOGRAPHY
UNIVERSITY OF CALIFORNIA, SAN DIEGO
LA JOLLA, CALIFORNIA 92093

TITLE FEMALE V-PACKING ADAPTER ~H.P.C~ (TOP SUB)

SURFACE TREATMENT	MATERIAL 304 S.S.	DRAWN BY RK	DATE 9·28·77	CHECKED	APPROVED
HEAT TREATMENT ANNEALED	PART NO. OP4157	SIZE DWG. NO. A-1265-			REV. 00

REVISIONS					
NO.	DESCRIPTION	DATE	BY	CH.	APR.

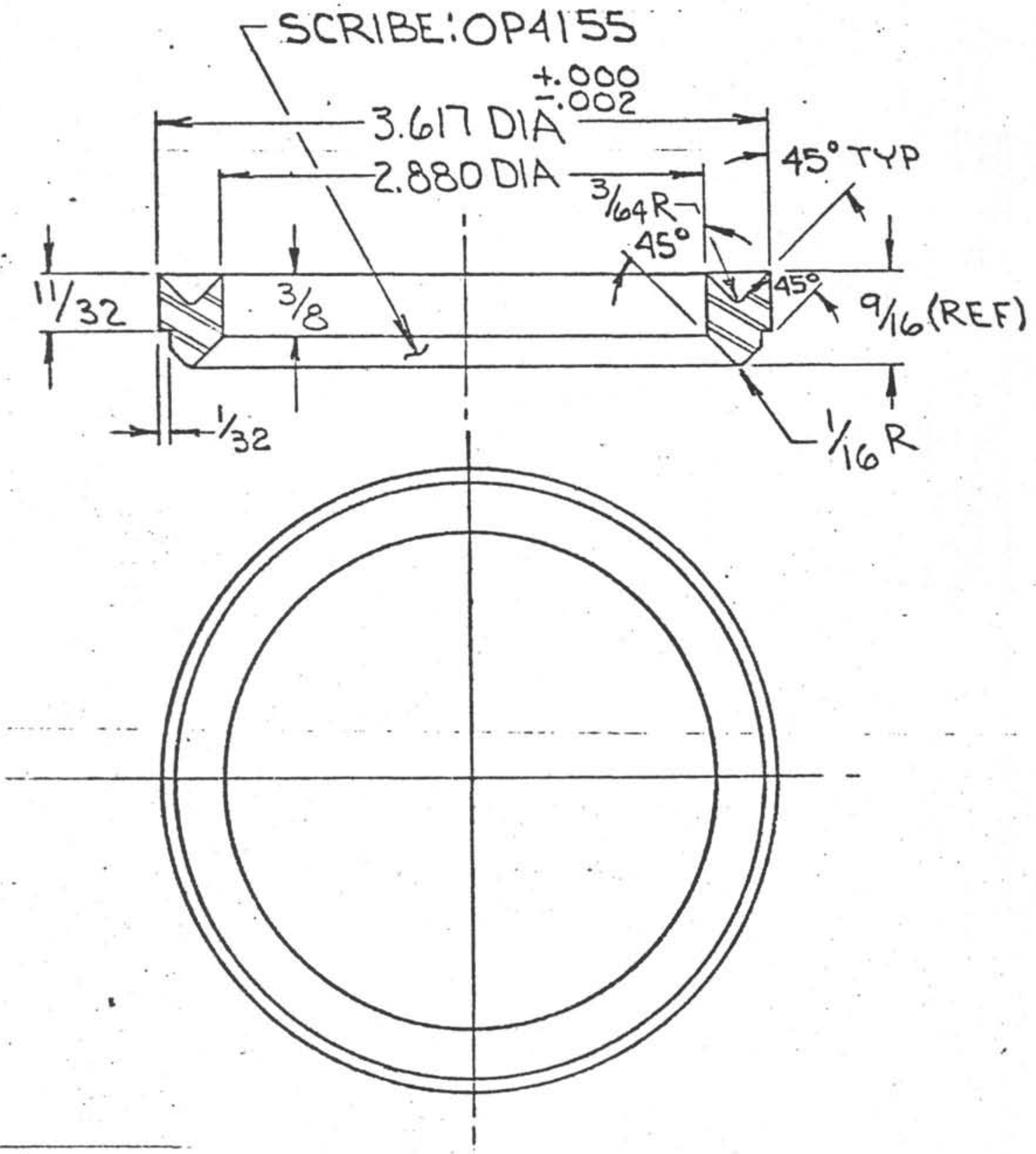

FABRICATE FROM 3 5/8 × 7/16 WALL MECHANICAL TUBINIG.

TOLERANCES UNLESS NOTED
FRACTIONS ± 1/64
DECIMALS ± .005
ANGLES ± 1/2°
CORNERS 1/64 x 45° or 1/64 R
FINISH 125 ✓

DEEP SEA DRILLING PROJECT
SCRIPPS INSTITUTION OF OCEANOGRAPHY
UNIVERSITY OF CALIFORNIA, SAN DIEGO
LA JOLLA, CALIFORNIA 92093

TITLE MALE-FEMALE V-PACKING ADAPTER ~ H.P.C ~ (TOP SUB)

SURFACE TREATMENT
MATERIAL 304 SS
DRAWN BY RK
DATE 9·23·79
CHECKED
APPROVED

HEAT TREATMENT ANNEALED
PART NO. OP 4155
SIZE A
DWG. NO. 1266-
REV. 00

REVISIONS					
NO.	DESCRIPTION	DATE	BY	CH.	APR.
1	2 3/8-8 WAS 2 3/8-6	3·30·81	RK		
2	ADDED: SLOT, O-RING GROOVE ,2.787 was 2.77 DIA	5·12·81	RK		

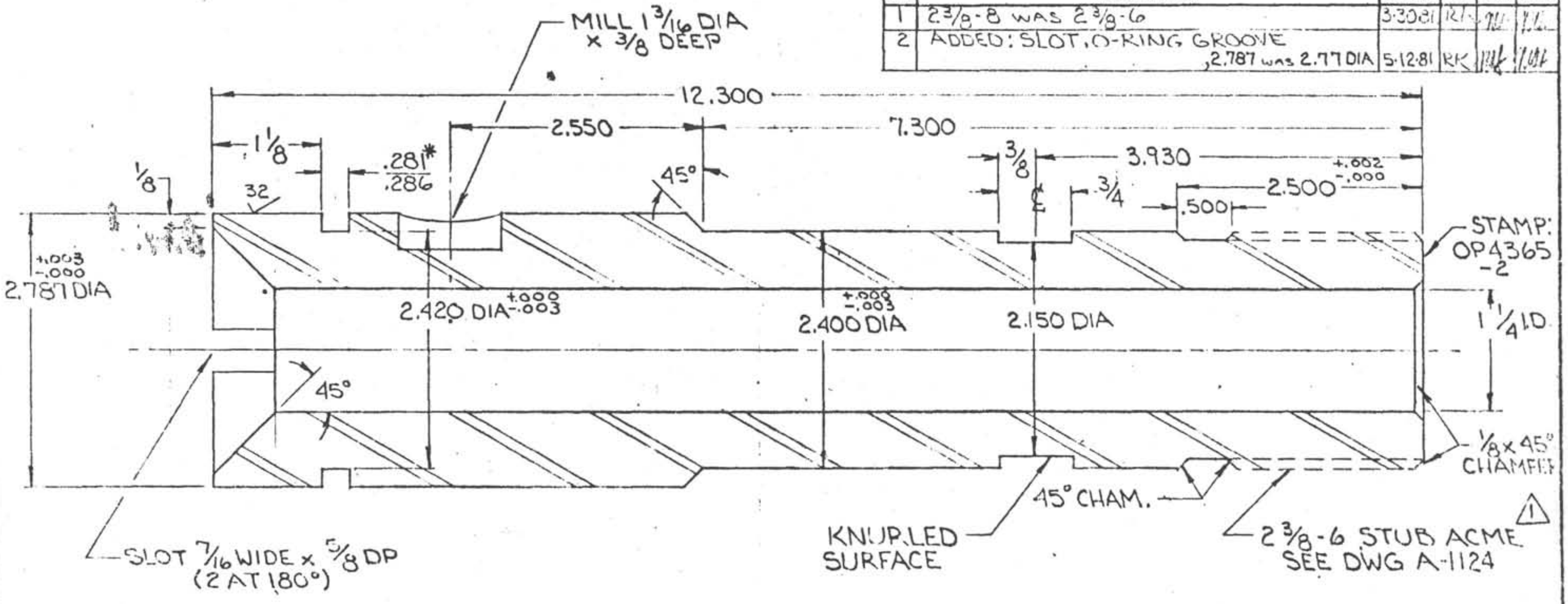

*FOR POLY PAK # 18702375

DO NOT SCALE

CONCENTRICITY ALL DIAMETERS: TIR .003

TOLERANCES UNLESS NOTED
FRACTIONS ± 1/64
DECIMALS ± .005
ANGLES ± 1/2°
CORNERS 1/64 x 45° or 1/64 R
FINISH 125

DEEP SEA DRILLING PROJECT
SCRIPPS INSTITUTION OF OCEANOGRAPHY
UNIVERSITY OF CALIFORNIA, SAN DIEGO
LA JOLLA, CALIFORNIA 92093

TITLE
INNER SWIVEL BODY
~VLHPC~

SURFACE TREATMENT	MATERIAL	DATE	BY	CHECKED	APPROVED
PARKOLUBE	4140	3-12-81	RK		

HEAT TREATMENT	SCALE	REQ'D/ASS'Y	PART NO.	DWG. NO. (REV.)
34-38 Rc	1:1	ONE	OP4365 - 2	B-OP4365 - 2

REVISIONS					
NO.	DESCRIPTION	DATE	BY	CH.	APR.
1	2 3/8-6 WAS 2 3/8-8	3-30-81	RK		

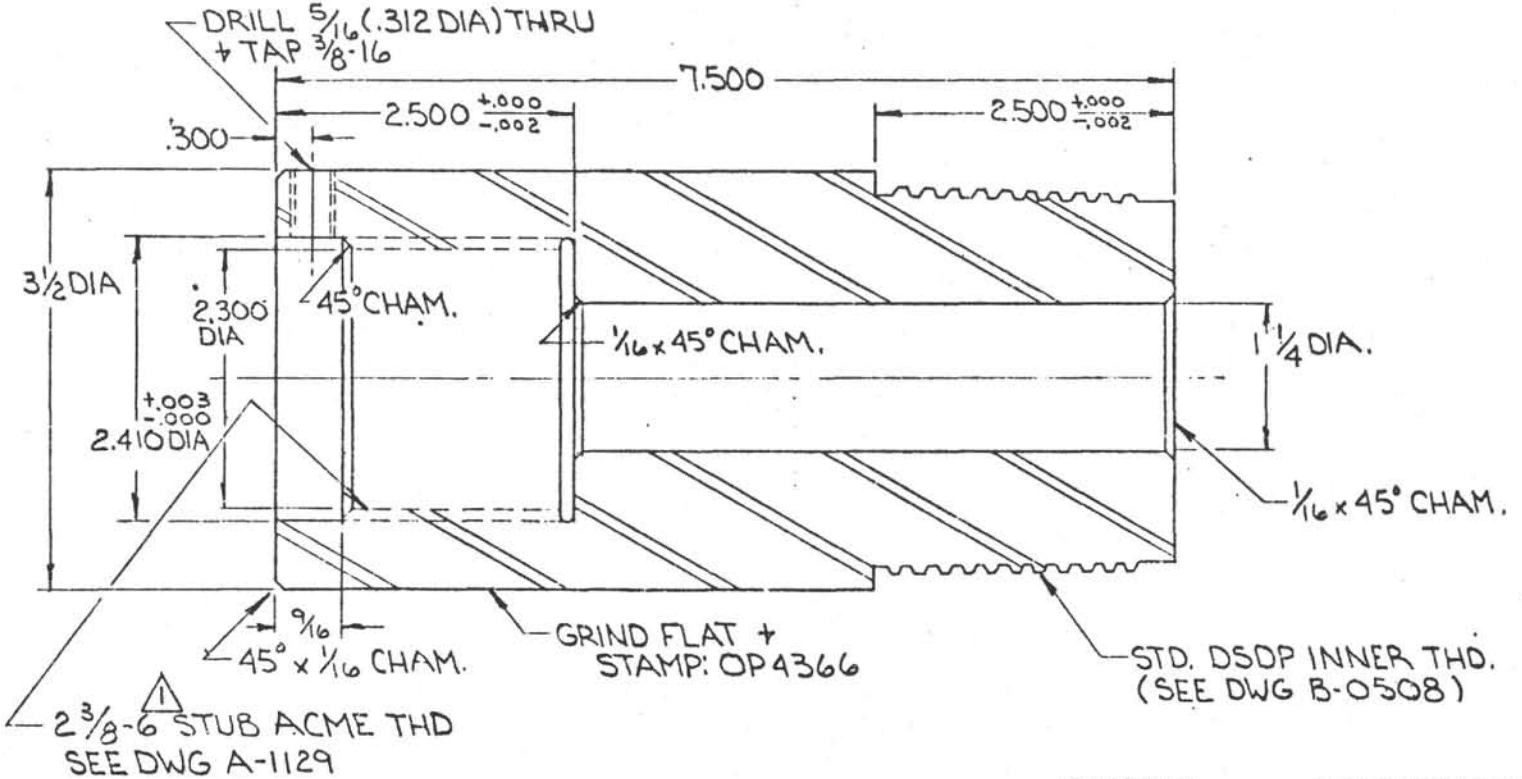

DO NOT SCALE

CONCENTRICITY ALL DIAMETERS: TIR .003

TOLERANCES UNLESS NOTED
FRACTIONS ± 1/64
DECIMALS ± .005
ANGLES ± 1/2°
CORNERS 1/64 x 45° or 1/64 R
FINISH 125

DEEP SEA DRILLING PROJECT
SCRIPPS INSTITUTION OF OCEANOGRAPHY
UNIVERSITY OF CALIFORNIA, SAN DIEGO
LA JOLLA, CALIFORNIA 92093

TITLE SWIVEL RETAINER ~VLHPC~

SURFACE TREATMENT	MATERIAL		DATE	BY	CHECKED	APPROVED
PARKOLUBE	4140		3-13-81	RK		
HEAT TREATMENT	SCALE	REQ'D/ASS'Y	PART NO.		DWG. NO. (REV.)	
34-38	1:1	ONE	OP4366-1		B-OP4366-1	

REVISIONS					
NO.	DESCRIPTION	DATE	BY	CH.	APR.
1	2.794 WAS 2.810, 2.424 WAS 2.500, 4.77/4.830 ADDED 3/4 MILLED HOLES	4.1.81	RK	[illegible]	[illegible]
2	ADD 32✓	5.12.81	RK	[illegible]	[illegible]

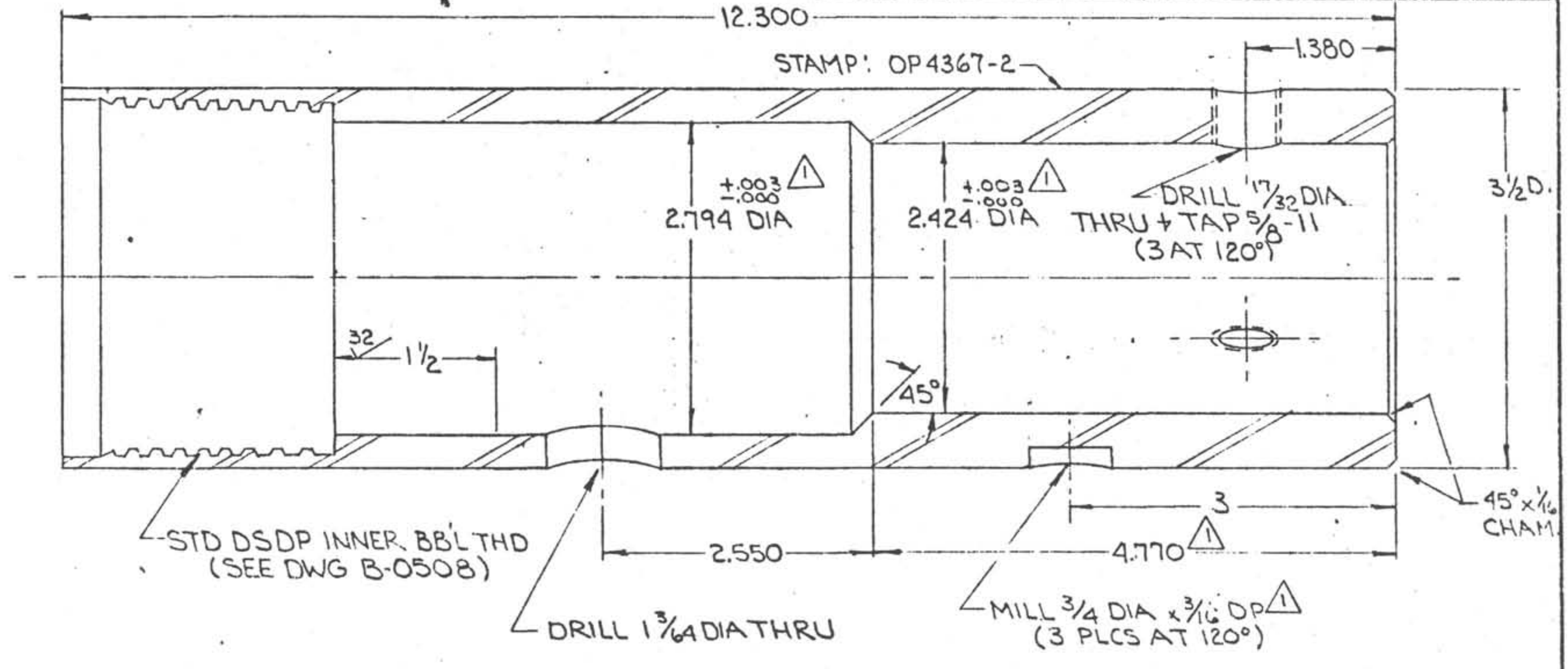

DO NOT SCALE

CONCENTRICITY ALL DIAMETERS: TIR .003

TOLERANCES UNLESS NOTED FRACTIONS ± 1/64 DECIMALS ± 005 ANGLES ± 1/2° CORNERS 1/64 x 45° or 1/64 R FINISH 125✓	DEEP SEA DRILLING PROJECT SCRIPPS INSTITUTION OF OCEANOGRAPHY UNIVERSITY OF CALIFORNIA, SAN DIEGO LA JOLLA, CALIFORNIA 92093 TITLE OUTER SWIVEL BODY ~VLHPC~					
SURFACE TREATMENT PARKOLUBE	MATERIAL 4140		DATE 3-12-81	BY RK	CHECKED [illegible]	APPROVED [illegible]
HEAT TREATMENT 34-38	SCALE 1:1	REQ'D/ASS'Y ONE	PART NO. OP4367-2		DWG NO. (REV.) BOP4367-2	

REVISIONS					
NO.	DESCRIPTION	DATE	BY	CH.	APR.
1	.196 DIA WAS .258	5·19·81	RK		
2	.228 WAS .196	4·2·82	RK		

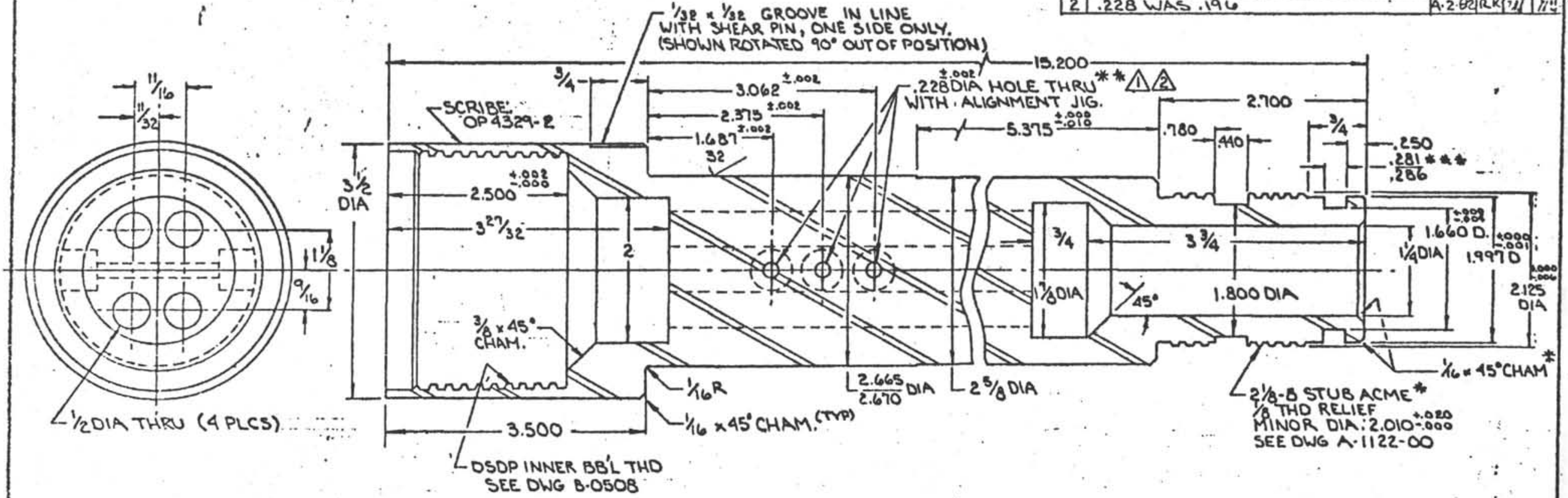

* H.T. PRIOR TO LOCTITE & FINISH MACHINING.

** C'BORE .5635 ±.0003 × 1/2" DP, BOTH ENDS (6 PLCS) FOR LOCTITE W/P/N OP4317.

*** FOR O-RING #2-326.

TOLERANCES UNLESS NOTED FRACTIONS ± 1/64 DECIMALS ± .005 ANGLES ± 1/2° CORNERS 1/64 × 45° or 1/64 R FINISH 125	DEEP SEA DRILLING PROJECT SCRIPPS INSTITUTION OF OCEANOGRAPHY UNIVERSITY OF CALIFORNIA, SAN DIEGO LA JOLLA, CALIFORNIA 92093				
	TITLE BYPASS SUB (7/32)				
SURFACE TREATMENT PARKOLUBE	MATERIAL 4130 C.D.	DRAWN BY RK	DATE 5/17/81	CHECKED	APPROVED
HEAT TREATMENT Rc 36-38	PART NO. OP 4329-2	SIZE DWG NO. R-OP4329-			REV. 2

REVISIONS

NO.	DESCRIPTION	DATE	BY	CH.	APR
1	.228 WAS .195	5·7·81	RK		
2	LOCTITE WAS #431	4·12·82	RK		

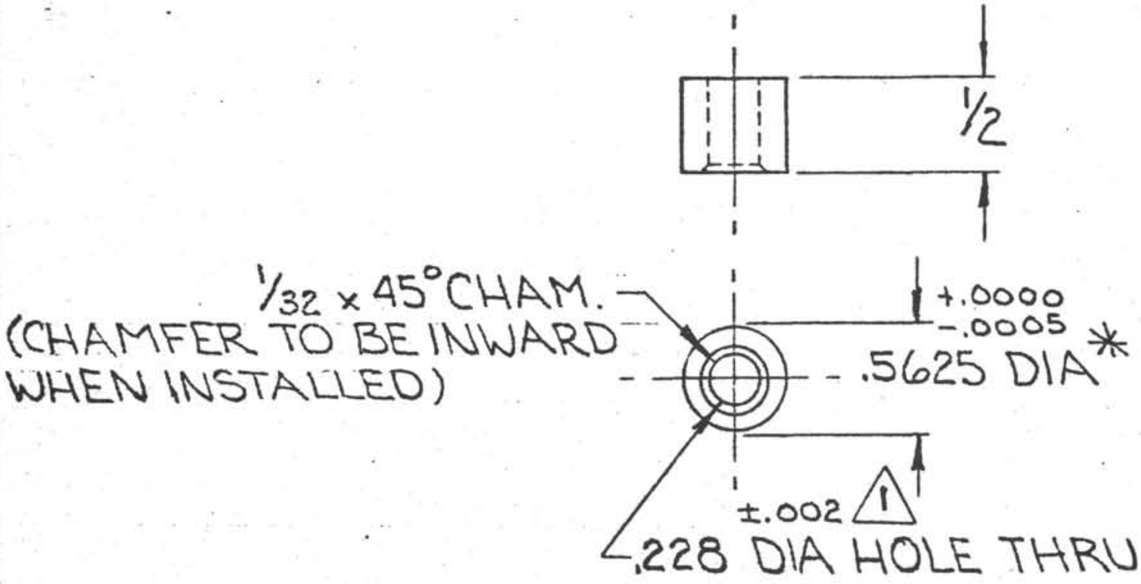

MTL: CARPENTER TOOL STEEL.
H.T: STENTOR-OIL HARD.

*△2 LOCITITE #271 WITH P/N OP4329, GRIND FLUSH AFTER INSTALLING (I.D. CHAMFER INWARD)

DO NOT SCALE CONCENTRICITY ALL DIAMETERS: TIR .003

TOLERANCES UNLESS NOTED FRACTIONS ± 1/64 DECIMALS ± .005 ANGLES ± 1/2° CORNERS 1/64 x 45° or 1/64 R FINISH 125✓	DEEP SEA DRILLING PROJECT SCRIPPS INSTITUTION OF OCEANOGRAPHY UNIVERSITY OF CALIFORNIA, SAN DIEGO LA JOLLA, CALIFORNIA 92093 TITLE BUSHING, SHEAR, 7/32 ~BYPASS SUB ~ VLHPC				
SURFACE TREATMENT —⊖—	MATERIAL SEE DWG	DATE 4·23·81	BY RK	CHECKED	APPROVED
HEAT TREATMENT SEE DWG	SCALE 1:1	REQ'D/ASS'Y 6	PART NO. OP4317-2	DWG. NO. A-OP4317-2	(REV.)

REVISIONS					
NO.	DESCRIPTION	DATE	BY	CH.	APR.

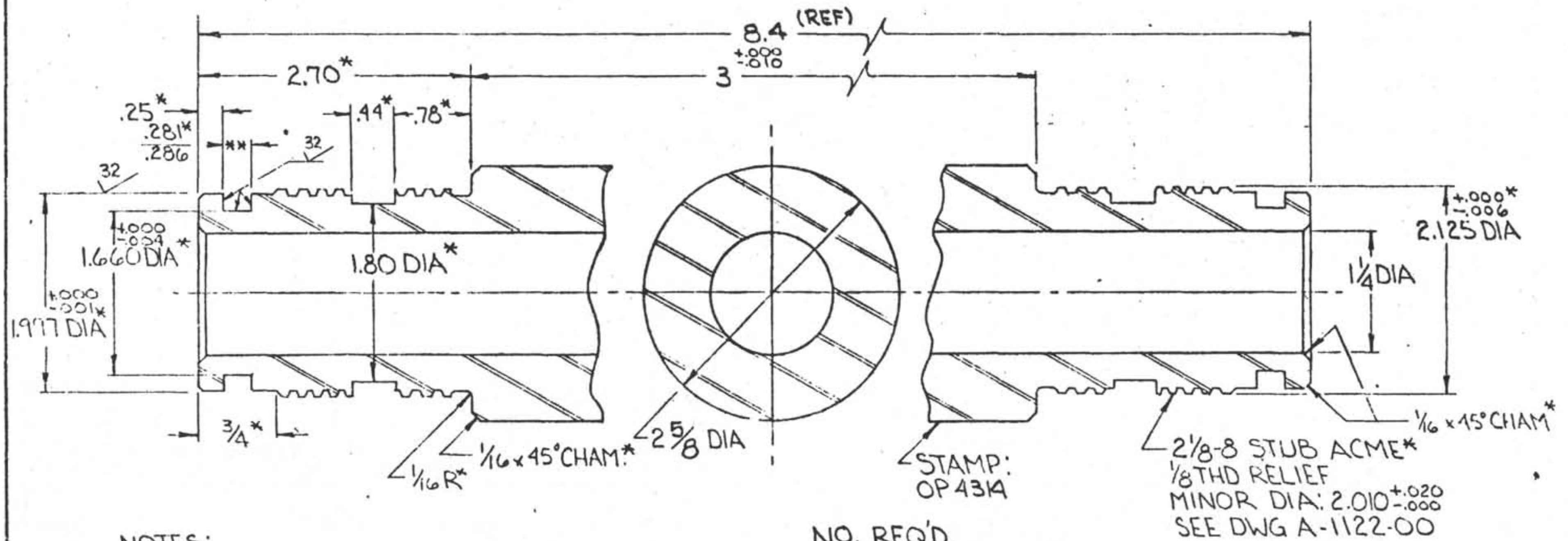

NOTES:

* TYP BOTH ENDS

** FOR O-RING # 2-326

NO. REQ'D.

3.5m = 1
5m = 1
6.5m = 2
8m = 2
9.5 " = 2

NOTE:
BREAK ALL SHARP EDGES
RADIUS ALL INSIDE CORNERS

CONCENTRICITY
ALL DIAMETERS
TIR .003

TOLERANCES UNLESS NOTED
FRACTIONS ± 1/64
DECIMALS ± .005
ANGLES ± 1/2°
CORNERS 1/64 x 45° or 1/64 R
FINISH 125 ✓

DEEP SEA DRILLING PROJECT
SCRIPPS INSTITUTION OF OCEANOGRAPHY
UNIVERSITY OF CALIFORNIA, SAN DIEGO
LA JOLLA, CALIFORNIA 92093

TITLE
SHAFT CONNECTOR
V.L.H.P.C.

SURFACE TREATMENT	MATERIAL	DRAWN BY	DATE	CHECKED	APPROVED
PARKOLUBRITE	4130 STEEL	[illegible]	[illegible]	[illegible]	[illegible]

HEAT TREATMENT	PART NO.	SIZE DWG. NO.	REV.
34-38 Rc	OP 4314	B-OP 4314	00

REVISIONS					
NO.	DESCRIPTION	DATE	BY	CH.	APR.
1	ADDED +0 −1/16 TOL.	4·7·81	RK		

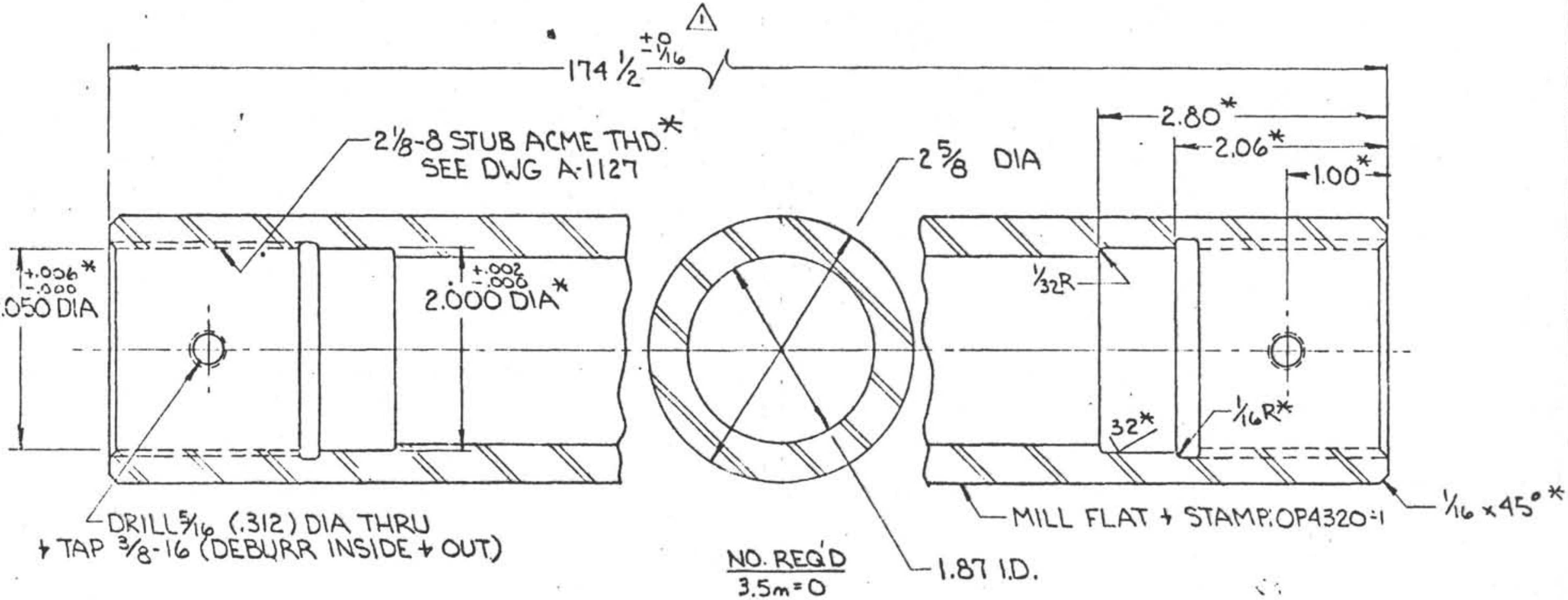

NO. REQ'D
3.5m = 0
5.0m = 1
6.5m = 0
8.0m = 1
9.5m = 2

*TYP BOTH ENDS.

1. HEAT TREAT: 34-38Rc, MIN YIELD: 140,000 PSI
   MIN IZOD: 40 FT. LBS.
2. STRAIGHTEN
3. PARKOLUBRITE

DO NOT SCALE

CONCENTRICITY ALL DIAMETERS: TIR .003

TOLERANCES UNLESS NOTED
FRACTIONS ± 1/64
DECIMALS ± .005
ANGLES ± 1/2°
CORNERS 1/64 x 45° or 1/64 R
FINISH 125

DEEP SEA DRILLING PROJECT
SCRIPPS INSTITUTION OF OCEANOGRAPHY
UNIVERSITY OF CALIFORNIA, SAN DIEGO
LA JOLLA, CALIFORNIA 92093

TITLE
4.5m SHAFT LINK
~VLHPC~

SURFACE TREATMENT	MATERIAL	DATE	BY	CHECKED	APPROVED
SEE DWG	4130 STEEL	10·29·80	RK		

HEAT TREATMENT	SCALE	REQ'D/ASS'Y	PART NO.	DWG. NO.	REV.
SEE DWG	1:1	SEE DWG	OP4320 - 1	B-OP4320-	1

REVISIONS

NO.	DESCRIPTION	DATE	BY	CH.	APR.
1	ADDED +0 -1/16 TOL.	4-7-81	RK		

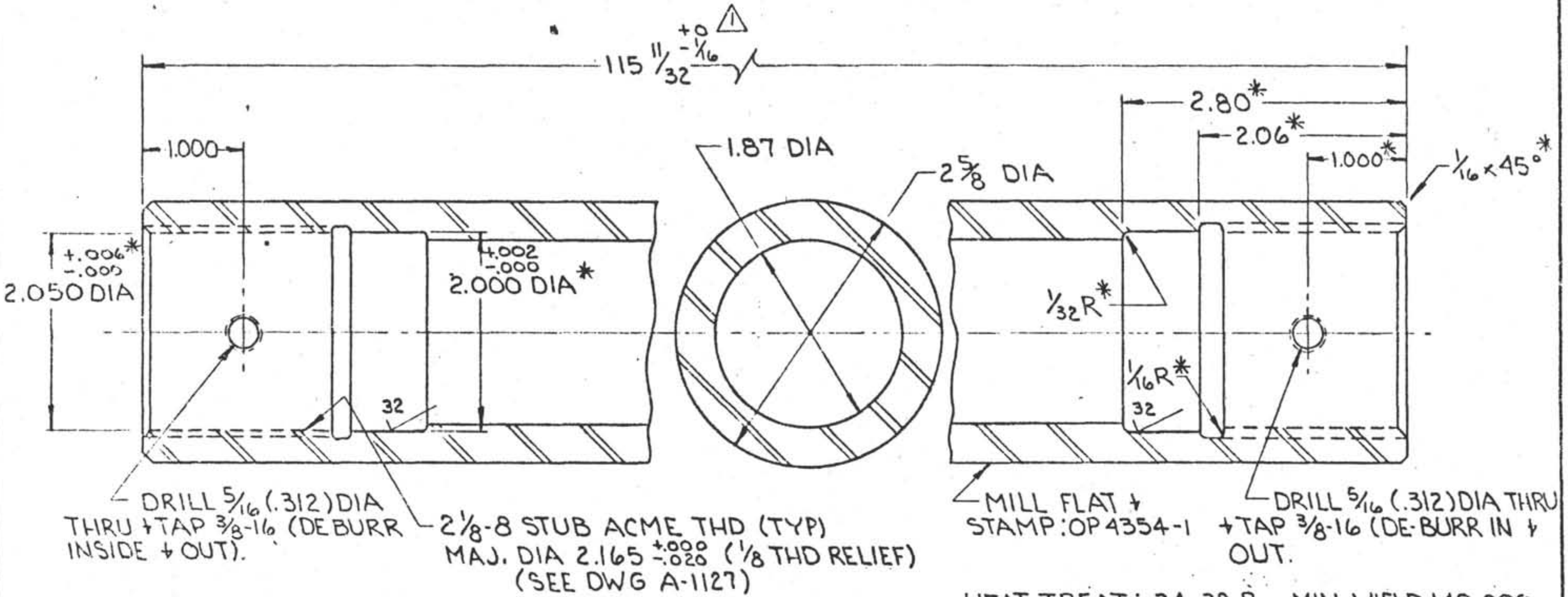

HEAT TREAT: 34-38 Rc, MIN YIELD 140,000
MIN IZOD 40 FT. LBS.

*TYP BOTH ENDS

NO. REQ'D
3.5m = 1
5.0m = 0
6.5m = 2
8.0m = 1
9.5m = 0

DO NOT SCALE

CONCENTRICITY ALL DIAMETERS: TIR .003

TOLERANCES UNLESS NOTED
FRACTIONS ± 1/64
DECIMALS ± .005
ANGLES ± 1/2°
CORNERS 1/64 x 45° or 1/64 R
FINISH 125

DEEP SEA DRILLING PROJECT
SCRIPPS INSTITUTION OF OCEANOGRAPHY
UNIVERSITY OF CALIFORNIA, SAN DIEGO
LA JOLLA, CALIFORNIA 92093

TITLE
3m SHAFT LINK
~VLHPC~

SURFACE TREATMENT	MATERIAL	DATE	BY	CHECKED	APPROVED
PARKOLUB.	4143 STEEL	11-2-80	RK		

HEAT TREATMENT	SCALE	REQ'D/ASS'Y	PART NO.	DWG. NO.	(REV.)
SEE LEFT	1:1	SEE DWG	OP 4354 - 1	B-OP4354 - 1	

REVISIONS					
NO.	DESCRIPTION	DATE	BY	CH.	APR.
1	ADDED +0 -1/16 TOL	4-7-81	RK		

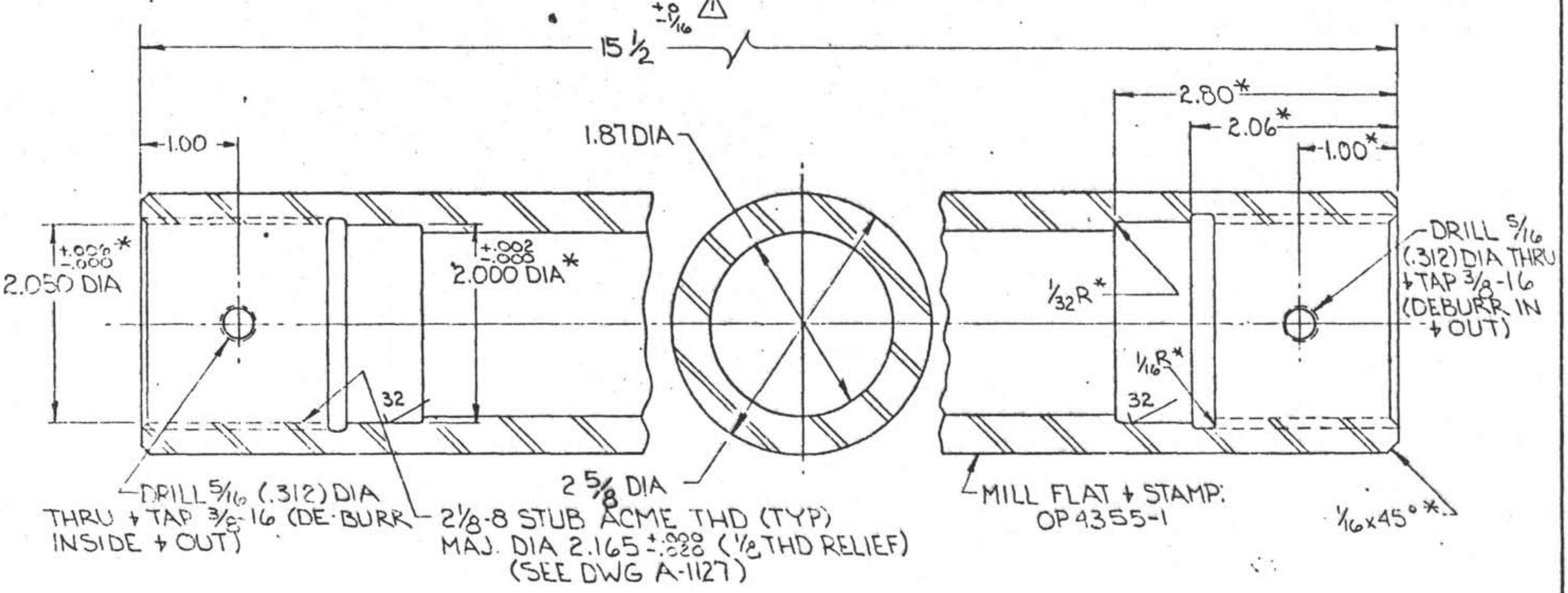

HEAT TREAT: 34-38 Rc, MIN YIELD 140,000 PSI
MIN IZOD 40 FT. LBS.

*TYP BOTH ENDS

CONCENTRICITY:
ALL DIAMETERS
TIR .003

NOTE:
BREAK ALL SHARP EDGES
RADIUS ALL INSIDE CORNERS

TOLERANCES UNLESS NOTED
FRACTIONS ± 1/64
DECIMALS ± .005
ANGLES ± 1/2°
CORNERS 1/64 x 45° or 1/64 R
FINISH 125✓

DEEP SEA DRILLING PROJECT
SCRIPPS INSTITUTION OF OCEANOGRAPHY
UNIVERSITY OF CALIFORNIA, SAN DIEGO
LA JOLLA, CALIFORNIA 92093

TITLE: LOWER SHAFT
V.L.H.P.C

SURFACE TREATMENT: PARKOLUBRITE
MATERIAL: 4130 ST.
DRAWN BY: RK
DATE:
CHECKED:
APPROVED:
HEAT TREATMENT: SEE ABOVE
PART NO.: OP4355-1
SIZE DWG NO.: B-OP4355-
REV.: 1

REVISIONS					
NO.	DESCRIPTION	DATE	BY	CH.	APR.
1	.332 WAS .25, 1.83 WAS 1.875, 1.70 WAS 1.75 2.863 WAS 2.873,	11·28·78	RK		
2	.44 WAS .332, 2.00 WAS 1.83, 1.80 WAS 1.70, TIN PLATE ADDED	4·20·79	RK		
3	DELETE O-RING GROOVE FOR 2-317	6·5·79	RK		
4	ADDED CONCENTRICITY TOL, SURFACE TREATMENT	7·6·79	RK		
5	1.360 WAS 1.115 $^{+.015}_{-.000}$	5·7·81	RK		

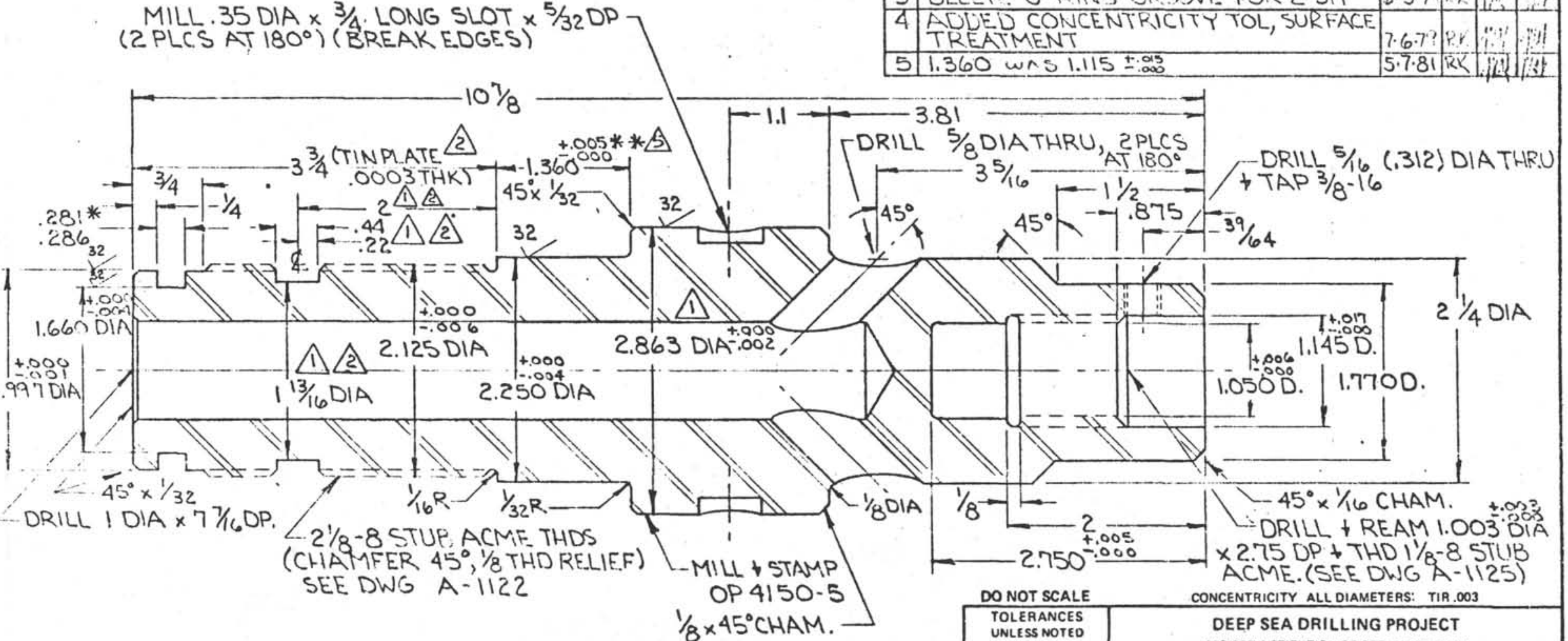

* FOR O-RING # 2-326 1 EA.
** FOR MOLYTHANE V-PACKING, 4 EA + M + F.

H.T. 34-38 Rc, IZOD 45 FT. LBS.
MIN. YIELD 140,000 PSI

DO NOT SCALE

CONCENTRICITY ALL DIAMETERS: TIR .003

TOLERANCES UNLESS NOTED FRACTIONS ± 1/64 DECIMALS ± .005 ANGLES ± 1/2° CORNERS 1/64 x 45° or 1/64 R FINISH 125 ✓	DEEP SEA DRILLING PROJECT SCRIPPS INSTITUTION OF OCEANOGRAPHY UNIVERSITY OF CALIFORNIA, SAN DIEGO LA JOLLA, CALIFORNIA 92093					
	TITLE INNER SEAL SUB 15' H·P·C					
SURFACE TREATMENT PARKOLUBE	MATERIAL 4140 STEEL		DATE 7·26·78	BY RK	CHECKED	APPROVED
HEAT TREATMENT ←	SCALE 1:1	REQ'D/ASS'Y 1	PART NO. OP4150-5		DWG. NO. (REV.) B-0927-5	

REVISIONS				
No.	DESCRIPTION	DATE	BY	APR
1	2.863 DIA WAS 2.873, CH. WAS .03 ONE SIDE	11.29.78	RK	
2	ADD. 45° CHAM, CONCENTRICITY TOL.	7.6.79	RK	
3	ADDED 9.5M TO TITLE	8.21.79	RK	
4	MAT'L WAS 4140 34-38Rc, PARKOLUBE	9.16.90	RK	

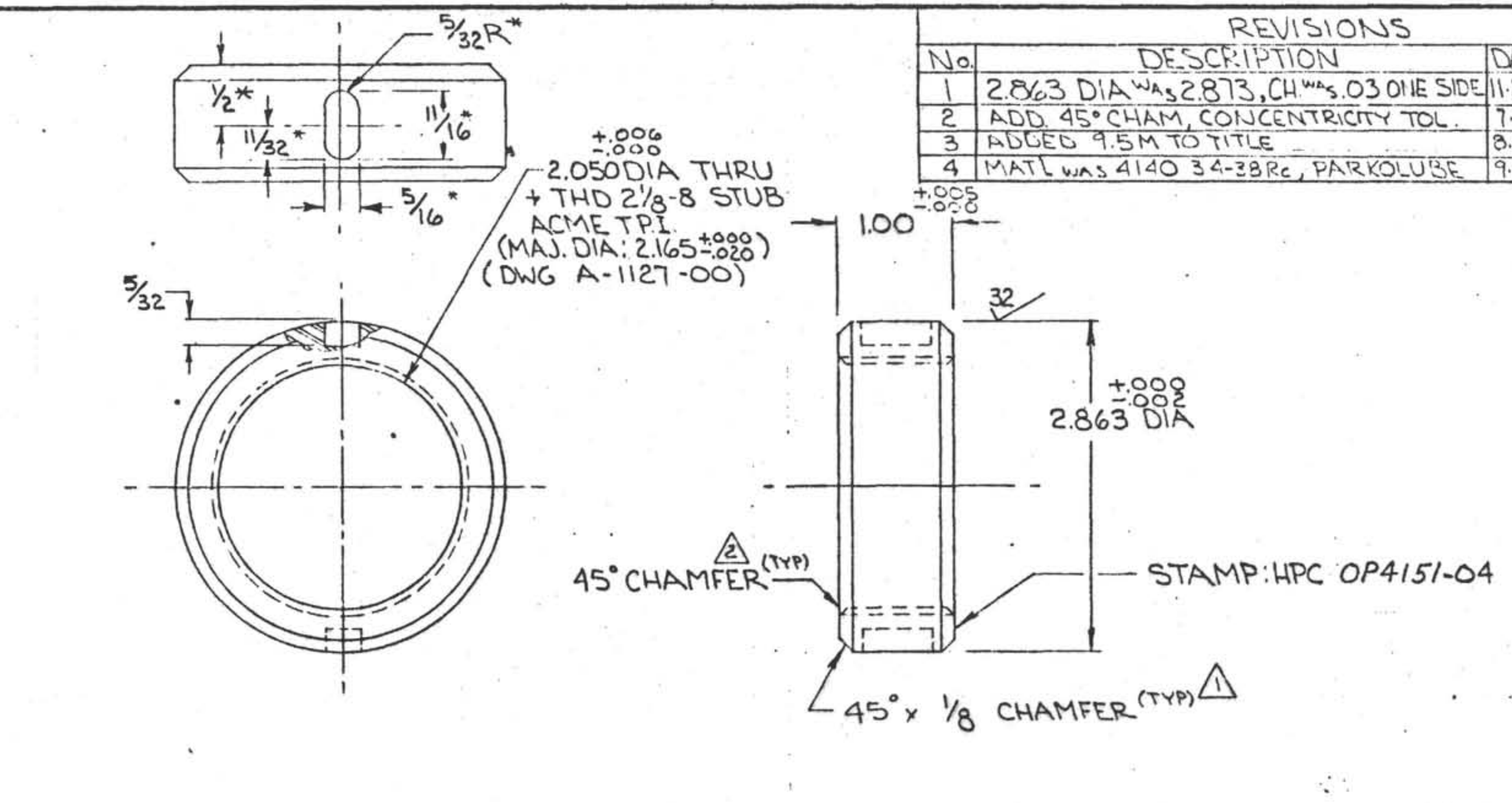

SURFACE TREAT: PARKOLUBRITE

MAT'L:
4140 STEEL H.T: 34-38 Rc

*TYP 2 PLCS AT 180°

NOTE:
BREAK ALL SHARP EDGES
RADIUS ALL INSIDE CORNERS

CONCENTRICITY:
ALL DIAMETERS
TIR .003

TOLERANCES
UNLESS NOTED
FRACTIONS ± 1/64
DECIMALS ± .005
ANGLES ± 1/2°
CORNERS 1/64 x 45°
or 1/64 R
FINISH 125

UNIV. OF CALIF.
DEEP SEA DRILLING PROJ.

SCALE: FULL	APPROVED BY:	DRAWN BY R.
DATE: 7-21-78		REVISED

INNER SEAL RETAINER - HPC

PART No. OP4151-04	DRAWING NUMBER C 0973 04

(WAS 25-0573-01)

REVISIONS

NO.	DESCRIPTION	DATE	BY	CH.	APR.
1	.0820 WAS 7/64, .113 WAS 9/64, .254/9/32	1·26·81	RK		

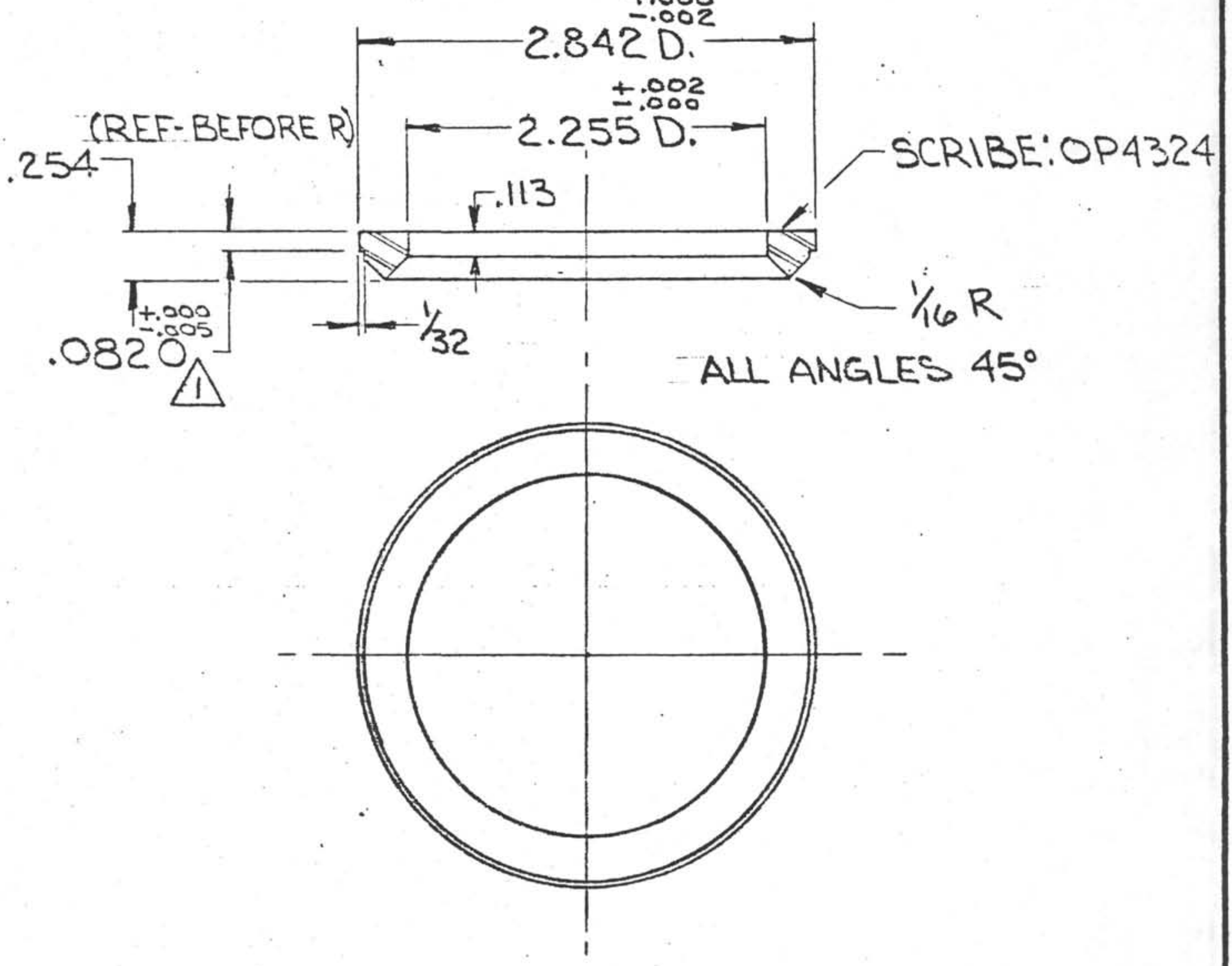

DO NOT SCALE

CONCENTRICITY ALL DIAMETERS: TIR .003

TOLERANCES
UNLESS NOTED
FRACTIONS ± 1/64
DECIMALS ± .005
ANGLES ± 1/2°
CORNERS 1/64 x 45°
or 1/64 R
FINISH 125 ✓

DEEP SEA DRILLING PROJECT
SCRIPPS INSTITUTION OF OCEANOGRAPHY
UNIVERSITY OF CALIFORNIA, SAN DIEGO
LA JOLLA, CALIFORNIA 92093

TITLE
MALE ADAPTER - INNER SEAL SUB
~VLHPC~

SURFACE TREATMENT	MATERIAL	DATE	BY	CHECKED	APPROVED
—o—	304 SS	9·19·80	RK		

HEAT TREATMENT	SCALE	REQ'D/ASS'Y	PART NO.	DWG. NO. (REV.)
ANNEALED	1:1	ONE	OP4324-1	A-OP4324-1

REVISIONS

NO.	DESCRIPTION	DATE	BY	CH.	APR.
1	3/16 WAS 1/4	11.13.80	RK		

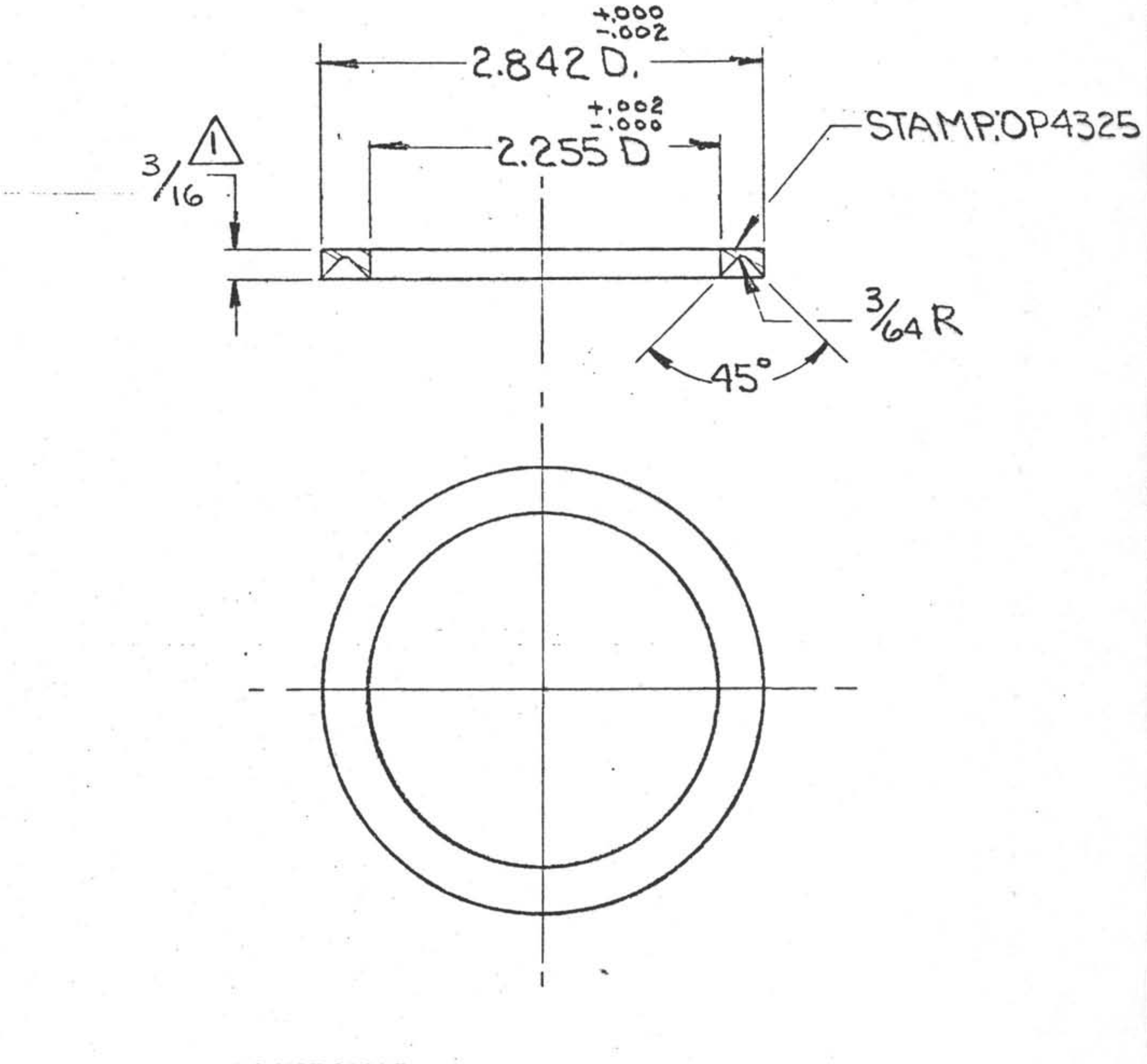

DO NOT SCALE

CONCENTRICITY ALL DIAMETERS: TIR .003

TOLERANCES
UNLESS NOTED
FRACTIONS ± 1/64
DECIMALS ± .005
ANGLES ± 1/2°
CORNERS 1/64 x 45°
or 1/64 R
FINISH 125

DEEP SEA DRILLING PROJECT
SCRIPPS INSTITUTION OF OCEANOGRAPHY
UNIVERSITY OF CALIFORNIA, SAN DIEGO
LA JOLLA, CALIFORNIA 92093

TITLE
FEMALE ADAPTER- INNER SEAL SUB
~VLHPC~

SURFACE TREATMENT	MATERIAL	DATE	BY	CHECKED	APPROVED
—⊖—	304 S.S.	9.19.80	RK		

HEAT TREATMENT	SCALE	REQ'D/ASS'Y	PART NO.	DWG. NO. (REV.)
ANNEALED	1:1	ONE	OP4325-1	A-OP4325-1

REVISIONS

NO.	DESCRIPTION	DATE	BY	CH.	APR.
1	5/32 WAS 9/32, 3/16 WAS 5/16, 11/32 WAS 15/32	11.13.80	RK		

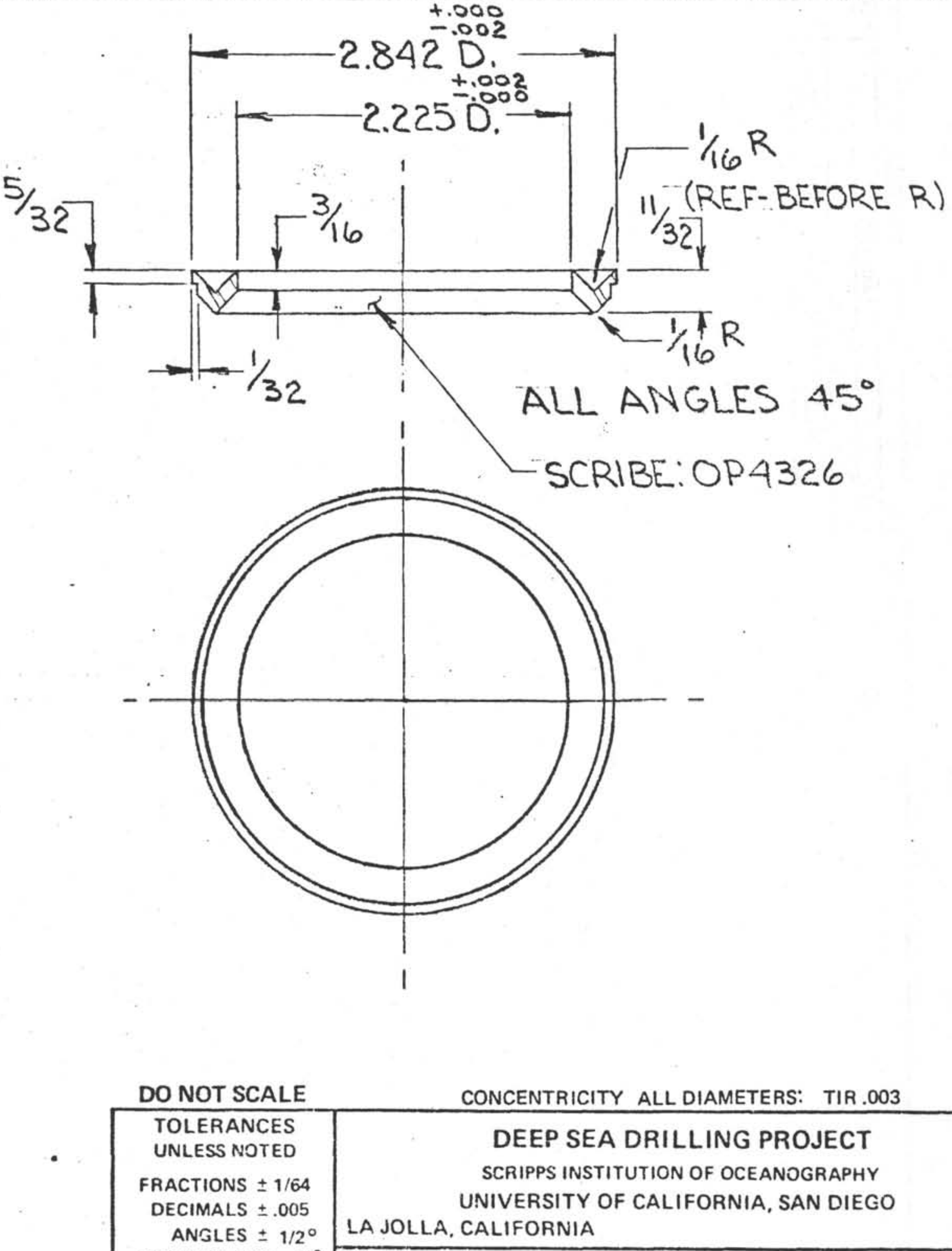

DO NOT SCALE

CONCENTRICITY ALL DIAMETERS: TIR .003

TOLERANCES UNLESS NOTED FRACTIONS ± 1/64 DECIMALS ± .005 ANGLES ± 1/2° CORNERS 1/64 x 45° or 1/64 R FINISH 125	DEEP SEA DRILLING PROJECT SCRIPPS INSTITUTION OF OCEANOGRAPHY UNIVERSITY OF CALIFORNIA, SAN DIEGO LA JOLLA, CALIFORNIA 92093				
	TITLE V-SPACER - MALE/FEMALE - INNER SEAL SUB ~ VLHPC				
SURFACE TREATMENT —0—	MATERIAL 304 SS	DATE 9.18.80	BY RK	CHECKED	APPROVED
HEAT TREATMENT ANNEALED	SCALE 1:1	REQ'D/ASS'Y	PART NO. OP 4326-1	DWG. NO. A-OP4326-1	(REV.)

REVISIONS					
NO.	DESCRIPTION	DATE	BY	CH.	APR.
1	9.37 WAS 9.5	1-7-81	RK		
2	15/16-8 THD WAS 5/8 SUCKER ROD THD	2-5-81	RL		
3	MAT'L WAS 4130, DELETE 1/4 I.D., NO. H.T.	3-5-81	RK		

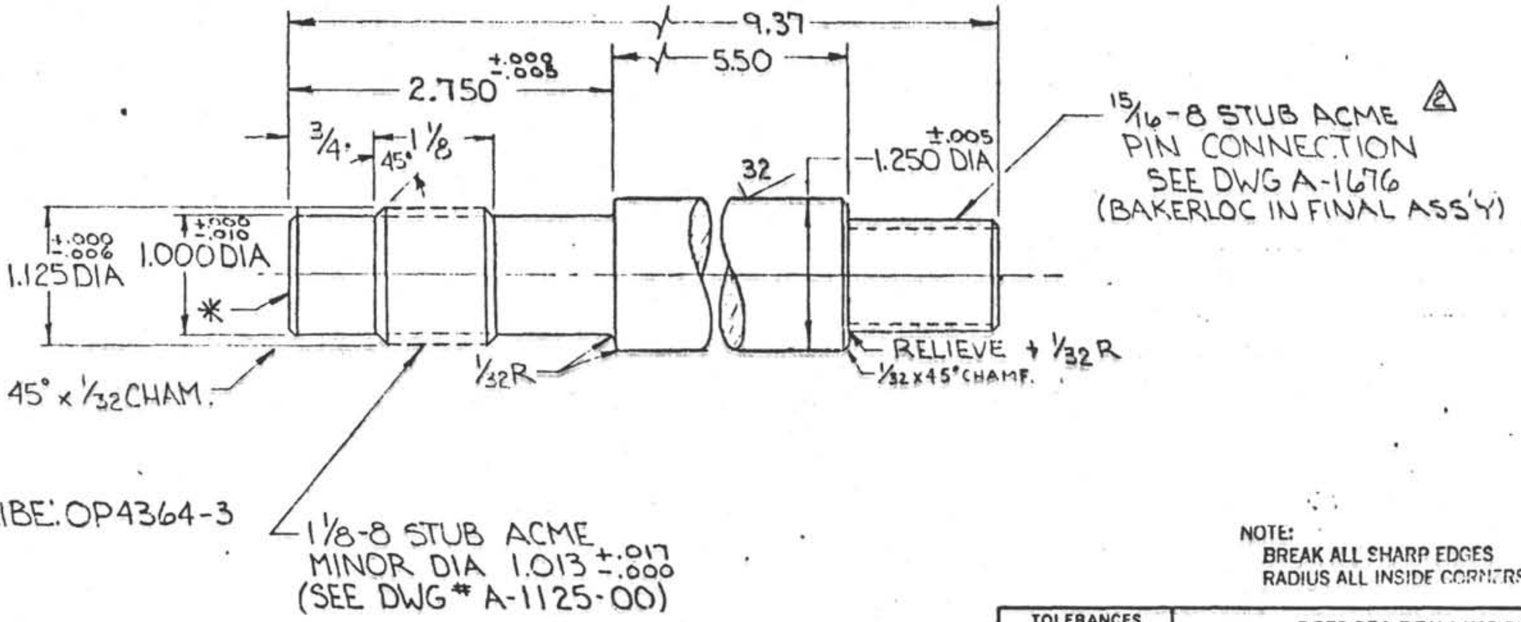

NOTE:
BREAK ALL SHARP EDGES
RADIUS ALL INSIDE CORNERS

CONCENTRICITY:
ALL DIAMETERS
TIR .008

** SAME AS AQUAMET 18

TOLERANCES UNLESS NOTED FRACTIONS ± 1/64 DECIMALS ± .005 ANGLES ± 1/2° CORNERS 1/64 x 45° or 1/64 R FINISH 125	**DEEP SEA DRILLING PROJECT** SCRIPPS INSTITUTION OF OCEANOGRAPHY UNIVERSITY OF CALIFORNIA, SAN DIEGO LA JOLLA, CALIFORNIA 92093 TITLE UPPER PISTON ROD V.L.H.P.C.				
SURFACE TREATMENT —	MATERIAL NITRONIC 32 **	DRAWN BY RL	DATE [illegible]	CHECKED	APPROVED
HEAT TREATMENT —	PART NO. OP4364-3	SIZE DWG. NO. B-OP4364-			REV. 3

REVISIONS					
NO.	DESCRIPTION	DATE	BY	CH.	APR.
1	REDRAWN	10-14-[illegible]	RJ		
2	15/16-8 WAS 5/8 SUCKER ROD	2-6-81	RJ		
3	MAT'L WAS 4130 1/4 WALL TUBE, NO H.T.	3-5-81	RK		
4	REVISED NOTE	3-9-81	RK		

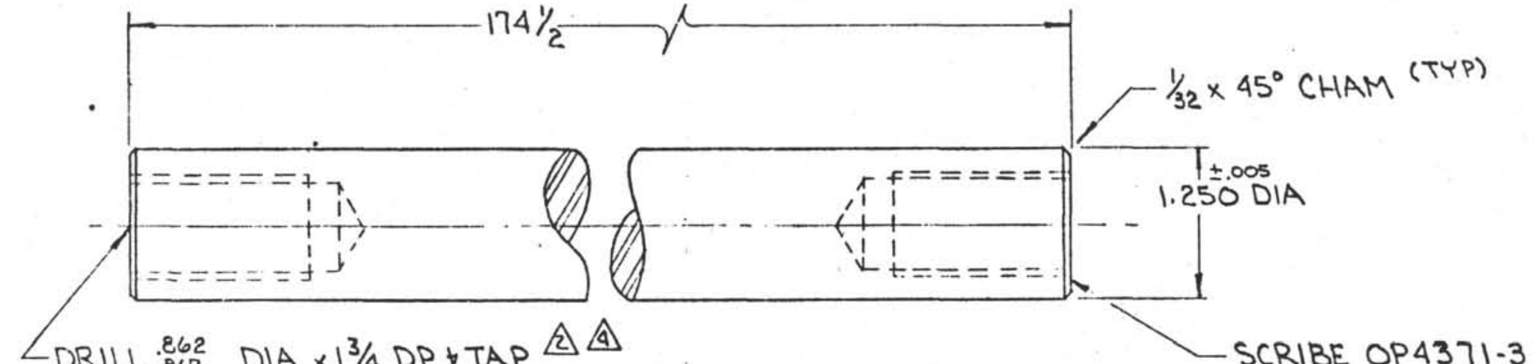

DRILL .862/.867 DIA × 1 3/4 DP & TAP 15/16-8 × 1 1/2 DP (TYP BOTH ENDS) (SEE DWG A-1657) (BAKERLOC IN FINAL ASSEMBLY)

SCRIBE OP4371-3

NO. REQ'D
3.5m = 0
5.0m = 1
6.5m = 0
8.0m = 1
9.5m = 2

*SAME AS AQUAMET 18

DO NOT SCALE

CONCENTRICITY ALL DIAMETERS: TIR .008

TOLERANCES UNLESS NOTED
FRACTIONS ± 1/64
DECIMALS ± .005
ANGLES ± 1/2°
CORNERS 1/64 × 45° or 1/64 R
FINISH 125 ✓

DEEP SEA DRILLING PROJECT
SCRIPPS INSTITUTION OF OCEANOGRAPHY
UNIVERSITY OF CALIFORNIA, SAN DIEGO
LA JOLLA, CALIFORNIA 92093

TITLE 4.5m PISTON ROD LINK
~VLHPC~

SURFACE TREATMENT ———	MATERIAL * NITRONIC 32		DATE 10-4-80	BY RK	CHECKED	APPROVED
HEAT TREATMENT ———	SCALE 1:1	REQ'D/ASS'Y SEE ABOVE	PART NO. OP4371 -4		DWG. NO. (REV.) B-OP4371 - 4	

REVISIONS					
NO.	DESCRIPTION	DATE	BY	CH.	APR.
1	5/8 WAS 3/8 (ERROR)	12·16·80	RK		
2	15/16-8 WAS 5/8 SINKER BAR	2·5·81	RK		
3	MAT'L WAS 4130, WAS TUBE, NO H.T.	3·5·81	RK		
4	REVISED NOTE	3·9·81	RK		

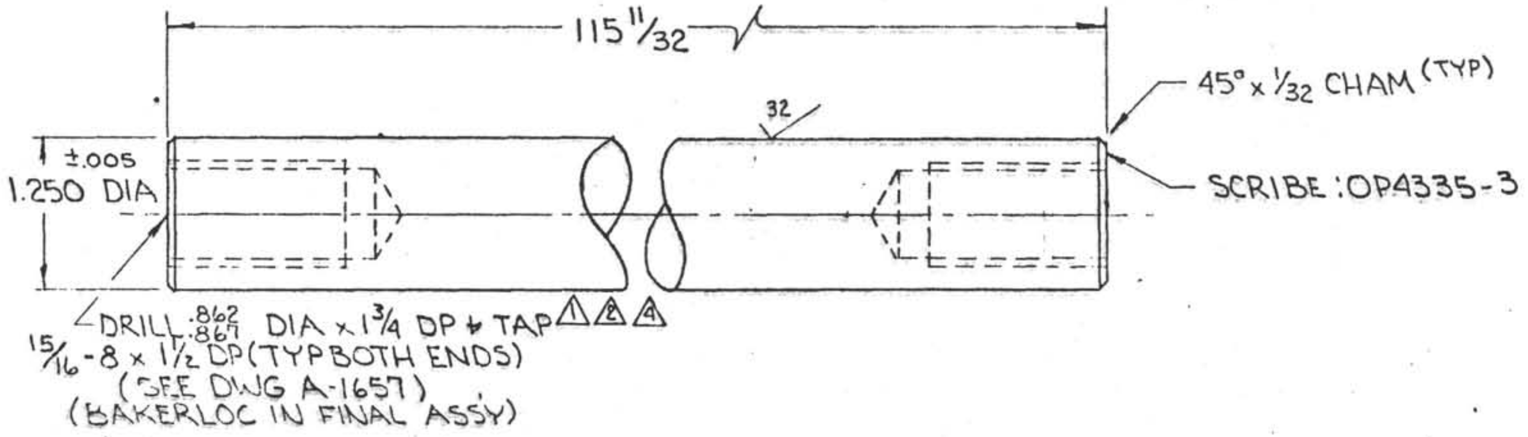

NO. REQ'D.

3.5m = 1
5.0m = 0
6.5m = 2
8.0m = 1
9.5m = 0

DO NOT SCALE

CONCENTRICITY ALL DIAMETERS: TIR .003

TOLERANCES UNLESS NOTED FRACTIONS ± 1/64 DECIMALS ± .005 ANGLES ± 1/2° CORNERS 1/64 × 45° or 1/64 R FINISH 125 ✓	DEEP SEA DRILLING PROJECT SCRIPPS INSTITUTION OF OCEANOGRAPHY UNIVERSITY OF CALIFORNIA, SAN DIEGO LA JOLLA, CALIFORNIA 92093 TITLE 3m PISTON ROD LINK ~V.L.H.P.C.~				
SURFACE TREATMENT ————	MATERIAL NITRONIC 32*	DATE 11·3·80	BY RK	CHECKED	APPROVED
HEAT TREATMENT ————	SCALE 1:1	REQ'D/ASS'Y SEE DWG	PART NO. OP4335-4	DWG. NO. B-OP4335-4	REV

*SAME AS AQUAMET 18

REVISIONS					
NO.	DESCRIPTION	DATE	BY	CH.	APR.
1	15/16-8 WAS 5/8 SUCKER ROD	2·6·81	RK		
2	MAT'L WAS 4130, DELETE 1/4 I.D., NO H.T.	3·5·81	RK		

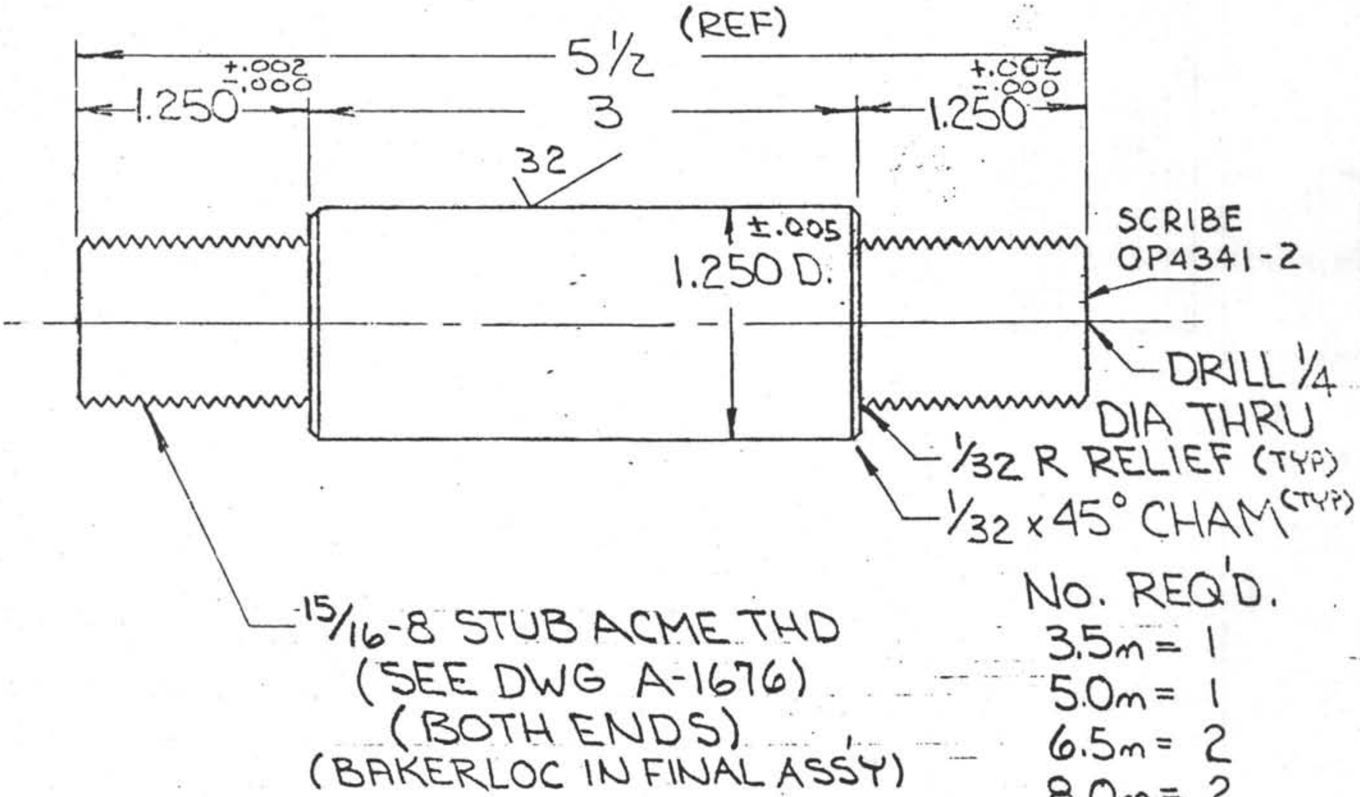

No. REQ'D.

3.5m = 1
5.0m = 1
6.5m = 2
8.0m = 2
9.5m = 2

CONCENTRICITY
ALL DIAMETERS
TIR .003

NOTE:
BREAK ALL SHARP EDGES
RADIUS ALL INSIDE CORNERS

*SAME AS AQUAMET 18

TOLERANCES UNLESS NOTED FRACTIONS ± 1/64 DECIMALS ± .005 ANGLES ± 1/2° CORNERS 1/64 x 45° or 1/64 R FINISH 125	DEEP SEA DRILLING PROJECT SCRIPPS INSTITUTION OF OCEANOGRAPHY UNIVERSITY OF CALIFORNIA, SAN DIEGO LA JOLLA, CALIFORNIA 92093				
	TITLE ROD CONNECTER ~VL HPC~				
SURFACE TREATMENT	MATERIAL NITRONIC 32 * 2	DRAWN BY RK	DATE 6·13·80	CHECKED	APPROVED
HEAT TREATMENT	PART NO. OP4341-2	SIZE DWG. NO. A-OP4341-			REV. 2

REVISIONS					
NO.	DESCRIPTION	DATE	BY	CH.	APR.
1	REDRAWN	10-14-8[illegible]	RK		
2	15/16-8 WAS 5/8 SUCKER ROR	2-6-81	R		
3	MAT'L WAS 4130 TUBE, NO H.T.	3-5-8[illegible]	R		
4	REVISED NOTE	3-9-81	RK		
5	13/32 WAS 25/64	4-6-81	RK		

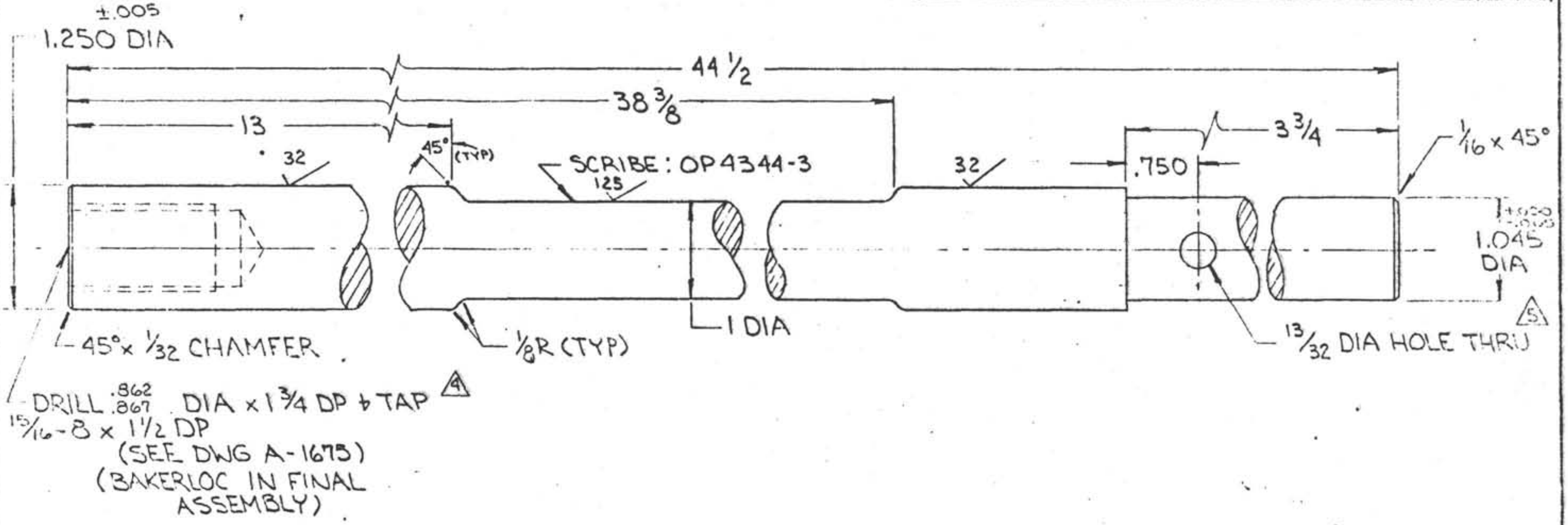

DO NOT SCALE

CONCENTRICITY ALL DIAMETERS: TIR .008

TOLERANCES UNLESS NOTED FRACTIONS ± 1/64 DECIMALS ± .005 ANGLES ± 1/2° CORNERS 1/64 × 45° or 1/64 R FINISH 125	DEEP SEA DRILLING PROJECT SCRIPPS INSTITUTION OF OCEANOGRAPHY UNIVERSITY OF CALIFORNIA, SAN DIEGO LA JOLLA, CALIFORNIA 92093					
	TITLE LOWER PISTON ROD ~VLHPC~					
SURFACE TREATMENT ——	MATERIAL NITRONIC 32		DATE 10-1-8[illegible]	BY RK	CHECKED	APPROVED
HEAT TREATMENT ——	SCALE 1:1	REQ'D/ASS'Y 1	PART NO. OP4344-5		DWG NO. B-OP4344-	REV

REVISIONS					
NO.	DESCRIPTION	DATE	BY	CH.	APR.
1	1.360 WAS 1.115, 2½ WAS 4.250	11·20·8	RK	[illegible]	[illegible]
2	REDRAWN COMBINING OP4385	4·3·81	RK	[illegible]	[illegible]

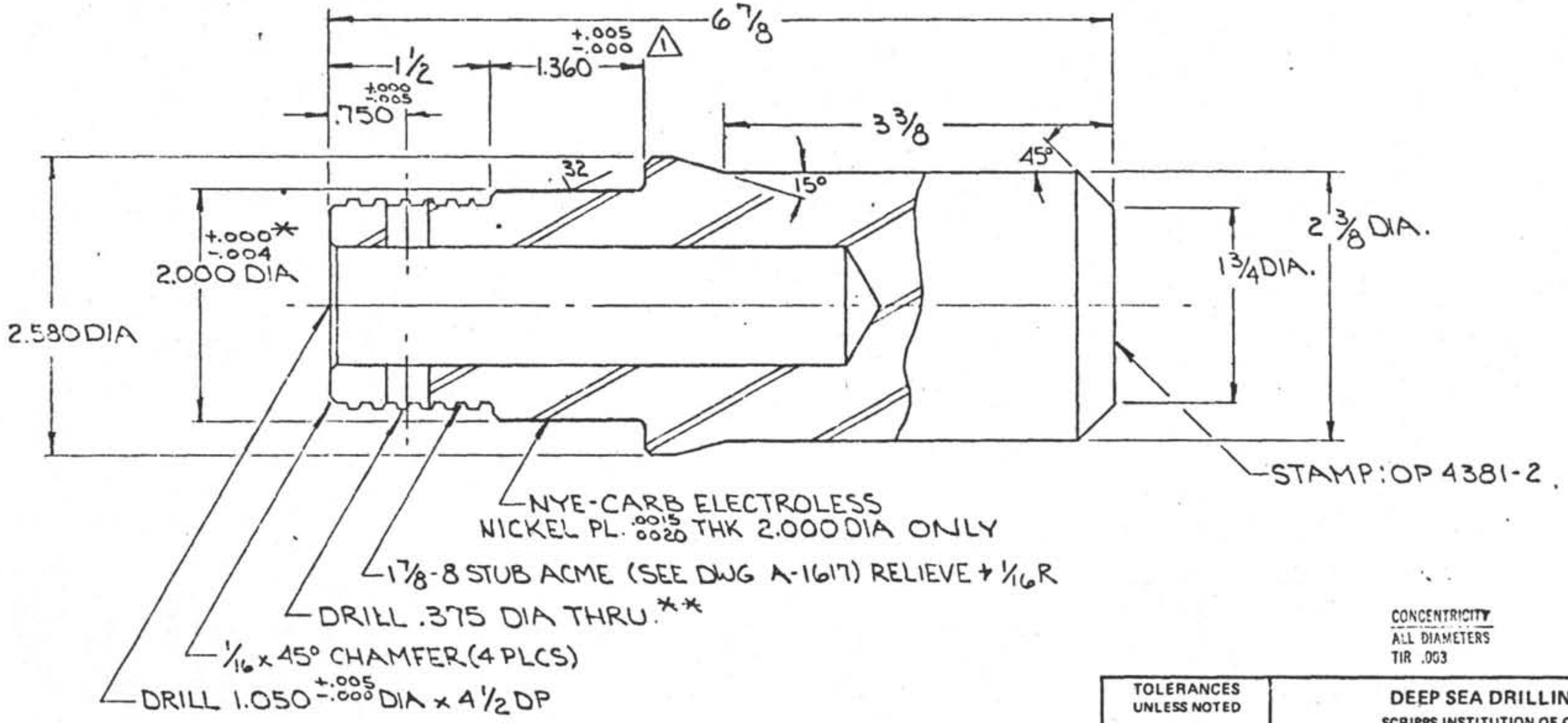

CONCENTRICITY
ALL DIAMETERS
TIR .003

* FOR SEALS OP4179

** DEBURR + CLEAN UP THREADS AFTER DRILLING.

NOTE:
BREAK ALL SHARP EDGES
RADIUS ALL [illegible]

TOLERANCES UNLESS NOTED
FRACTIONS ± 1/64
DECIMALS ± .005
ANGLES ± 1/2°
CORNERS 1/64 × 45° or 1/64 R
FINISH 125

DEEP SEA DRILLING PROJECT
SCRIPPS INSTITUTION OF OCEANOGRAPHY
UNIVERSITY OF CALIFORNIA, SAN DIEGO
LA JOLLA, CALIFORNIA 92093

TITLE
QUICK RELEASE PISTON HEAD
~ VLHPC ~

SURFACE TREATMENT	MATERIAL	DRAWN BY	DATE	CHECKED	APPROVED
PARKOLUBRITE	4140 STEEL	KK	4·3·8	[illegible]	[illegible]

HEAT TREATMENT	PART NO.	SIZE DWG. NO.	REV.
36 - 38 Rc	OP4381-2	B-OP4381-	2

REVISIONS					
NO.	DESCRIPTION	DATE	BY	CH.	APR.

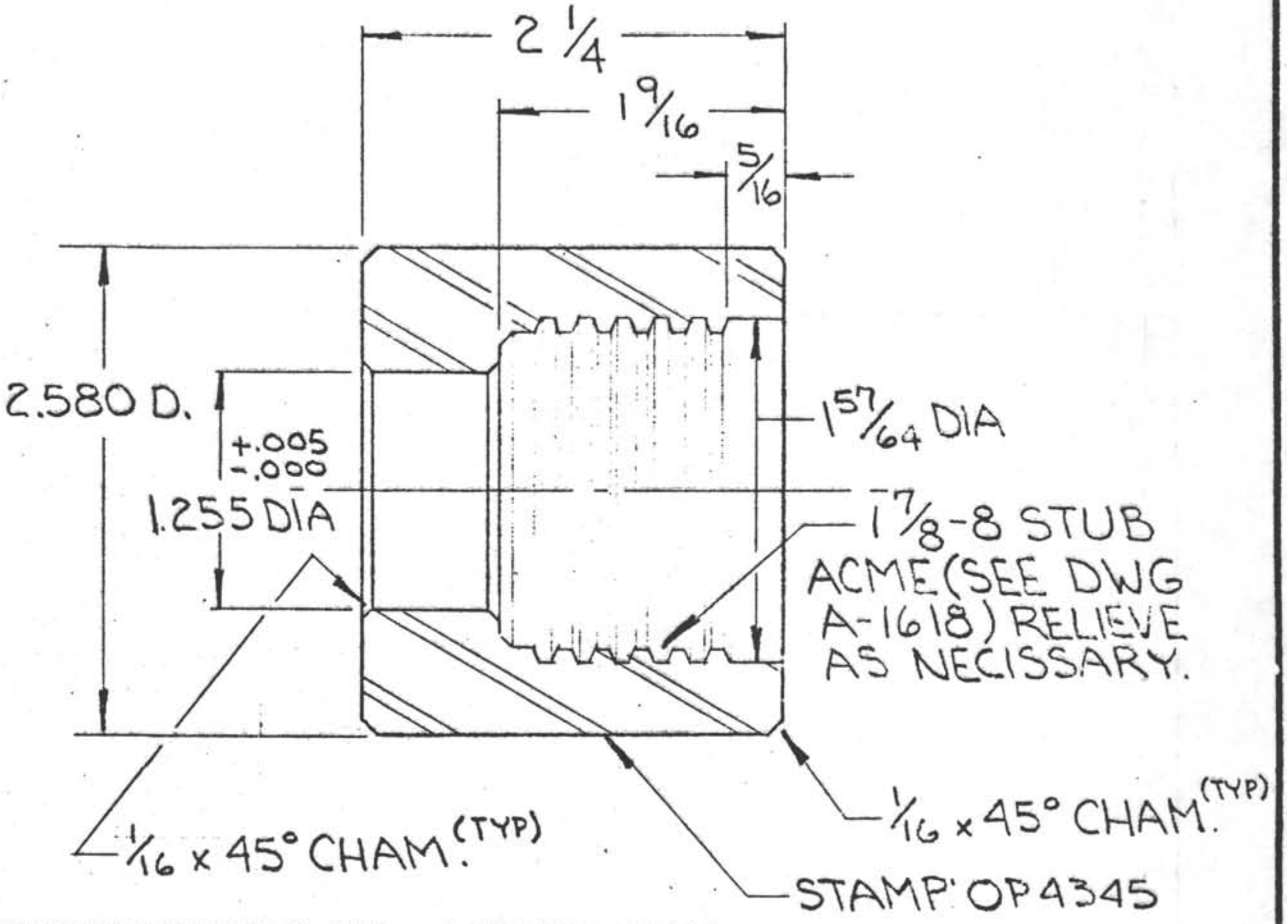

DO NOT SCALE

CONCENTRICITY ALL DIAMETERS: TIR .003

TOLERANCES UNLESS NOTED FRACTIONS ± 1/64 DECIMALS ± .005 ANGLES ± 1/2° CORNERS 1/64 x 45° or 1/64 R FINISH 125 ✓	DEEP SEA DRILLING PROJECT SCRIPPS INSTITUTION OF OCEANOGRAPHY UNIVERSITY OF CALIFORNIA, SAN DIEGO LA JOLLA, CALIFORNIA 92093 TITLE PISTON SEAL RETAINER ~VLHPC~					
SURFACE TREATMENT PARKOLUBRITE	MATERIAL 4130 STEEL		DATE 10-8-80	BY RK	CHECKED	APPROVED
HEAT TREATMENT Rc 28-32	SCALE 1:1	REQ'D/ASS'Y ONE	PART NO. OP 4345		DWG. NO A-OP4345	(REV.)

REVISIONS

NO.	DESCRIPTION	DATE	BY	CH.	APR.
1	CHANGE MAT'L FROM 304-SS TO 17-4 PH SS, ADD H1150	7-13-81	DC		

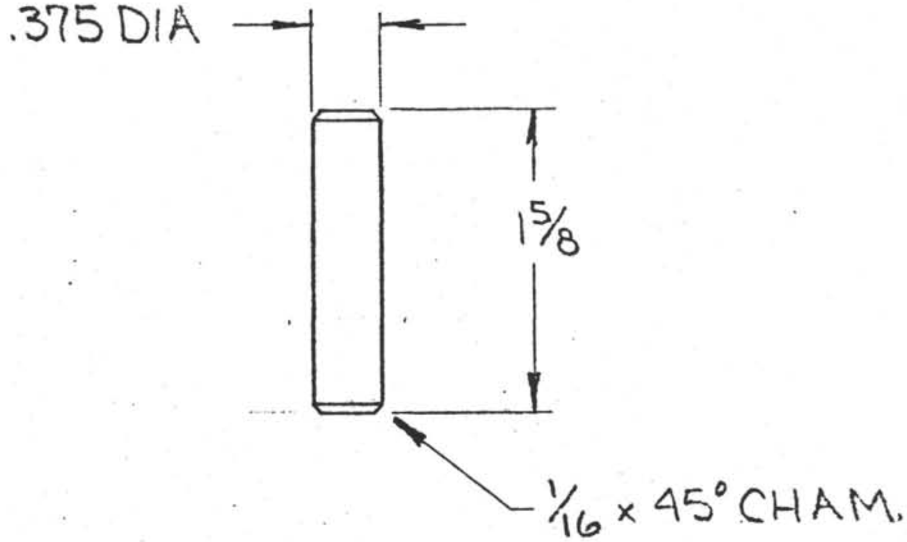

DO NOT SCALE

CONCENTRICITY ALL DIAMETERS: TIR .003

TOLERANCES UNLESS NOTED FRACTIONS ± 1/64 DECIMALS ± .005 ANGLES ± 1/2° CORNERS 1/64 x 45° or 1/64 R FINISH 125	DEEP SEA DRILLING PROJECT SCRIPPS INSTITUTION OF OCEANOGRAPHY UNIVERSITY OF CALIFORNIA, SAN DIEGO LA JOLLA, CALIFORNIA 92093 TITLE LOCK PIN - PISTON ~VLHPC~				
SURFACE TREATMENT —	MATERIAL 17-4 PH SS	DATE 10-14-80	BY RK	CHECKED	APPROVED
HEAT TREATMENT H1150	SCALE 1:1	REQ'D/ASS'Y ONE	PART NO. OP4383-1	DWG. NO. A-OP4383	(REV.) 1

REVISIONS

NO.	DESCRIPTION	DATE	BY	CH.	APR.
1	REDUCED THICKNESS	11·21·80	RK		
2	.094 WAS 7/64, 1/8 WAS 9/64, .266 WAS 9/32	1·26·81	RK		

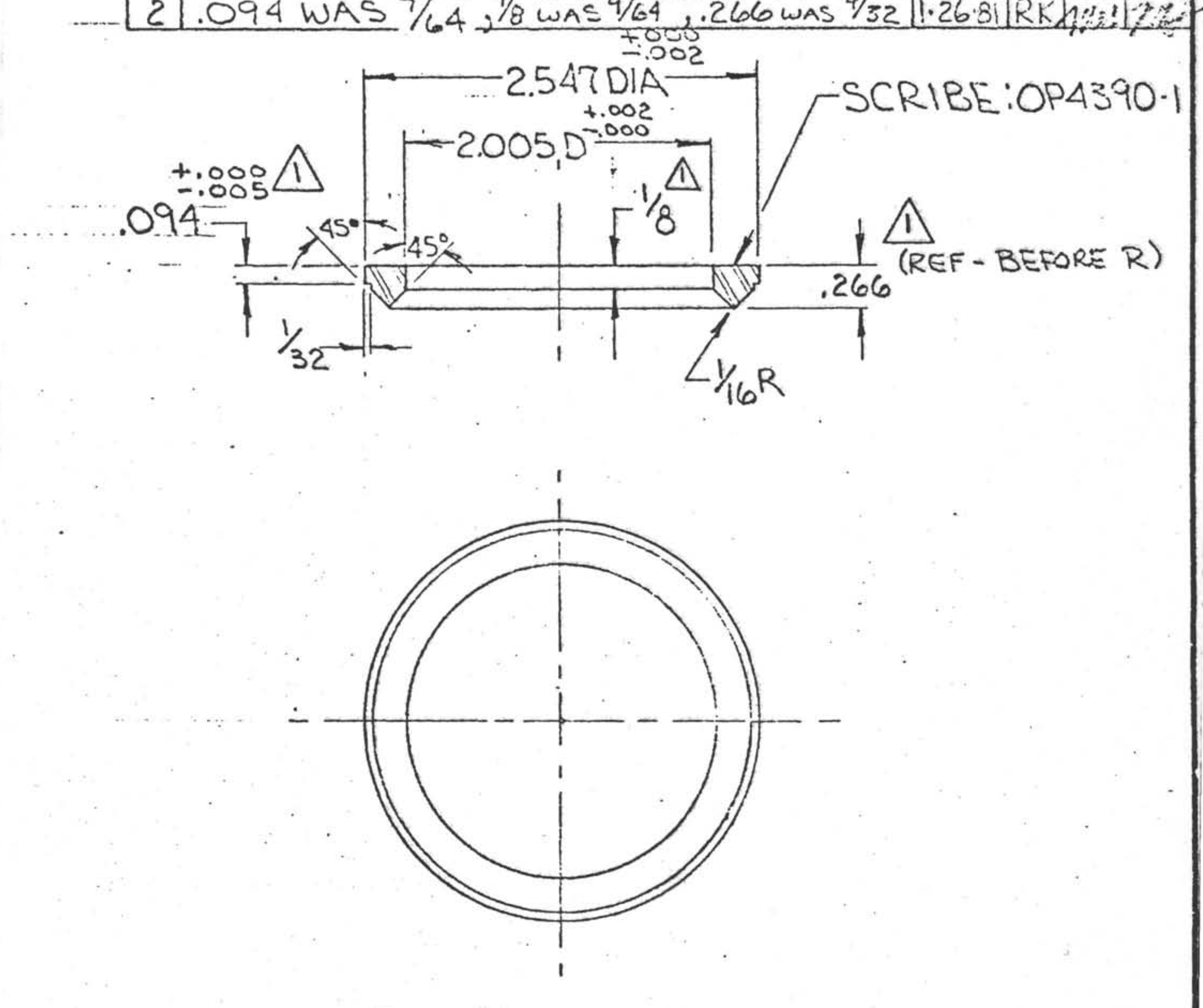

FABRICATE FROM 2 5/8 × 9/16 WALL MECH. TUBING. - 304 S.S.

DO NOT SCALE

CONCENTRICITY ALL DIAMETERS: TIR .003

TOLERANCES
UNLESS NOTED
FRACTIONS ± 1/64
DECIMALS ± .005
ANGLES ± 1/2°
CORNERS 1/64 x 45°
or 1/64 R
FINISH 125 ✓

DEEP SEA DRILLING PROJECT
SCRIPPS INSTITUTION OF OCEANOGRAPHY
UNIVERSITY OF CALIFORNIA, SAN DIEGO
LA JOLLA, CALIFORNIA 92093

TITLE MALE V-PACKING ADAPTER
(PISTON HEAD) ~ VLHPC ~

SURFACE TREATMENT	MATERIAL	DATE	BY	CHECKED	APPROVED
	SEE ABOVE	10·13·80	RK		

HEAT TREATMENT	SCALE	REQ'D/ASS'Y	PART NO.	DWG. NO. (REV.)
ANNEALED	1:1	1	OP4390-2	A-OP4390-2

REVISIONS					
NO.	DESCRIPTION	DATE	BY	CH.	APR.
1	REDUCED THICKNESS	11·21·80	RK		

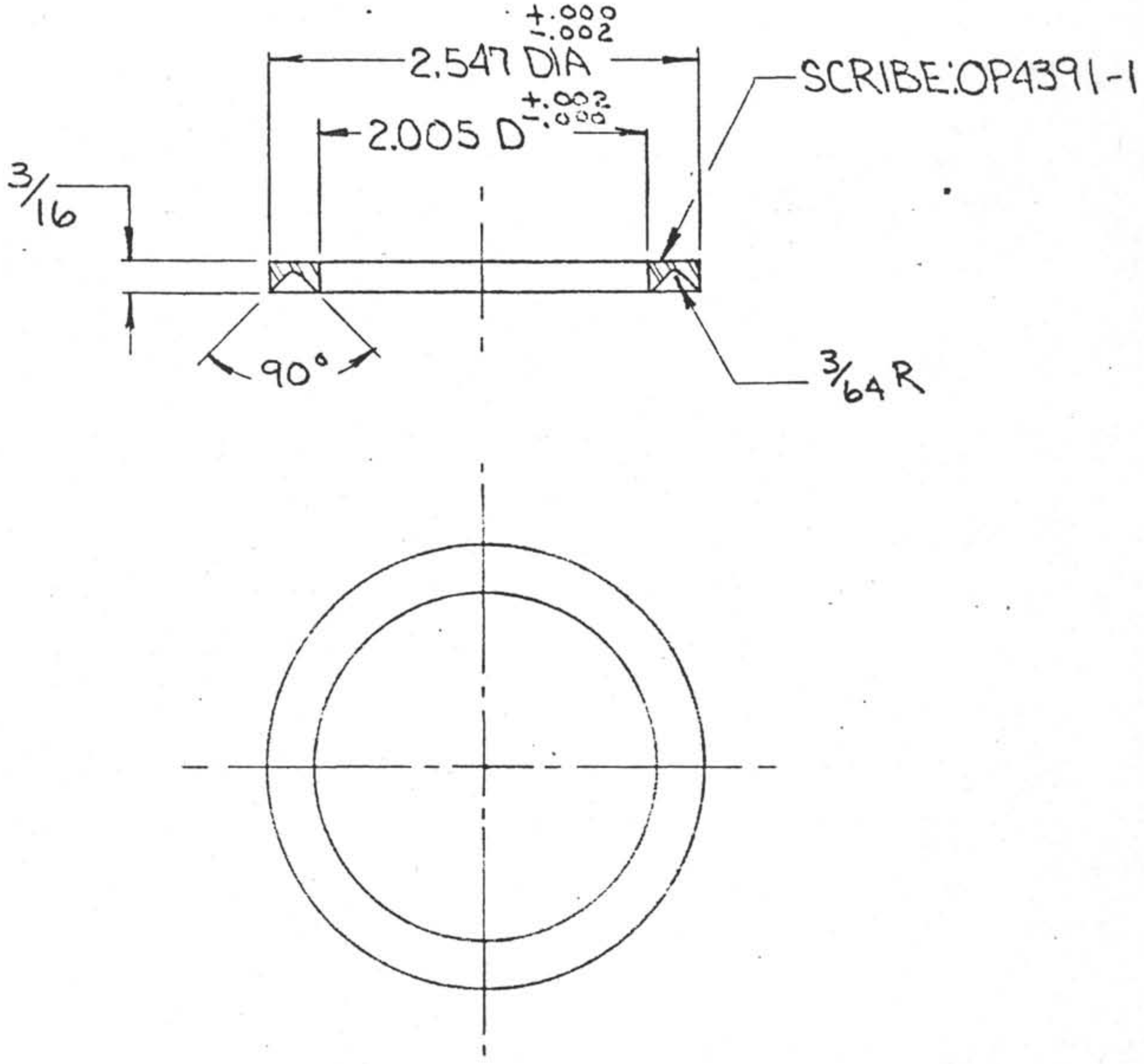

FABRICATE FROM 2 5/8 × 9/16 WALL MECH. TUBING - 304 S.S.

DO NOT SCALE

CONCENTRICITY ALL DIAMETERS: TIR .003

TOLERANCES UNLESS NOTED
FRACTIONS ± 1/64
DECIMALS ± .005
ANGLES ± 1/2°
CORNERS 1/64 x 45° or 1/64 R
FINISH 125

DEEP SEA DRILLING PROJECT
SCRIPPS INSTITUTION OF OCEANOGRAPHY
UNIVERSITY OF CALIFORNIA, SAN DIEGO
LA JOLLA, CALIFORNIA 92093

TITLE FEMALE ADAPTER ~ PISTON HEAD ~VLHPC~

SURFACE TREATMENT	MATERIAL SEE ABOVE		DATE 10·13·80	BY RK	CHECKED	APPROVED
HEAT TREATMENT ANNEALED	SCALE 1:1	REQ'D/ASS'Y 1	PART NO. OP4391-1		DWG. NO. A-OP4391	(REV.) 1

REVISIONS					
NO.	DESCRIPTION	DATE	BY	CH.	APR.
1	REDUCED THICKNESS	11-21-80	RK		

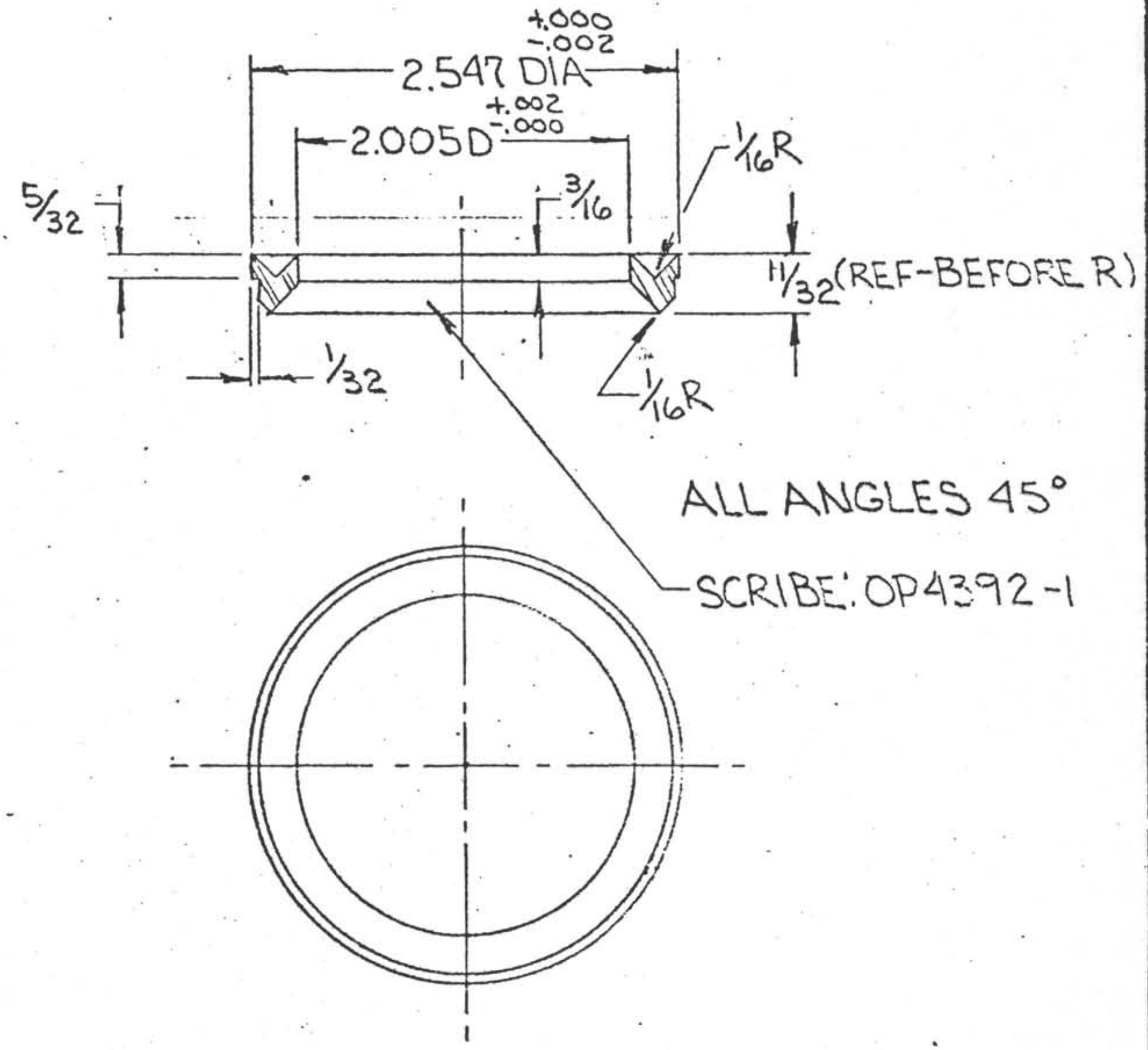

ALL ANGLES 45°

SCRIBE: OP4392-1

FABRICATE FROM 2 5/8 x 9/16 WALL MECH TUBING - 304S.S.

DO NOT SCALE

CONCENTRICITY ALL DIAMETERS: TIR .003

TOLERANCES UNLESS NOTED FRACTIONS ± 1/64 DECIMALS ± .005 ANGLES ± 1/2° CORNERS 1/64 x 45° or 1/64 R FINISH 125	DEEP SEA DRILLING PROJECT SCRIPPS INSTITUTION OF OCEANOGRAPHY UNIVERSITY OF CALIFORNIA, SAN DIEGO LA JOLLA, CALIFORNIA 92093 TITLE V-SPACER ~ PISTON HEAD ~VLHPC~					
SURFACE TREATMENT	MATERIAL SEE ABOVE		DATE 10-13-80	BY RK	CHECKED	APPROVED
HEAT TREATMENT ANNEALED	SCALE 1:1	REQ'D/ASS'Y	PART NO. OP4392-1		DWG. NO. A-OP4392-1	(REV.)

REVISIONS

NO.	DESCRIPTION	DATE	BY	CH.	APR.
1	REVISED DESIGN	9.11.80	RK		
2	3/8 DIA TYP WAS 5/16, 3/8 + 7/16	2.24.81	RK		

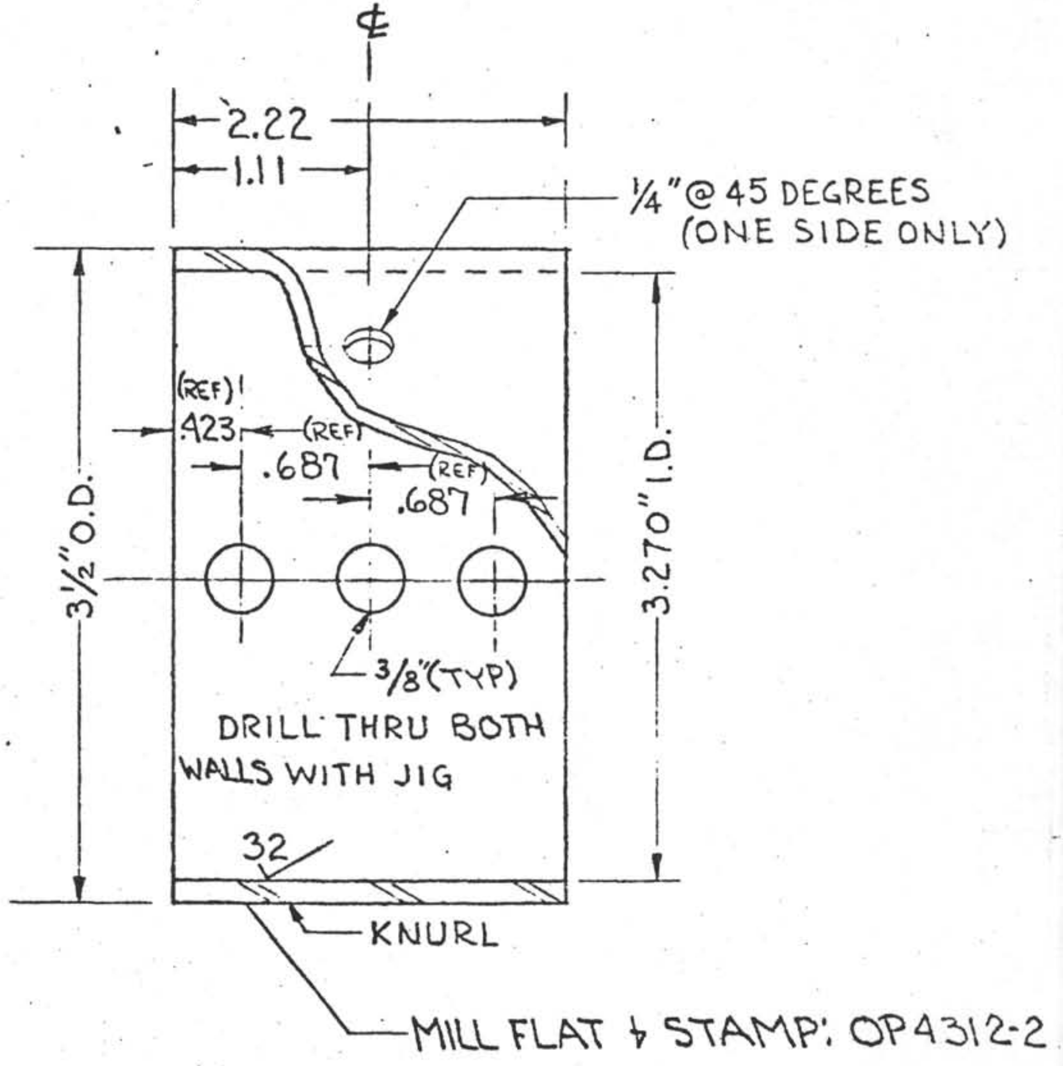

NOTE:
BREAK ALL SHARP EDGES
RADIUS ALL INSIDE CORNERS

TOLERANCES UNLESS NOTED
FRACTIONS ± 1/64
DECIMALS ± .005
ANGLES ± 1/2°
CORNERS 1/64 x 45° or 1/64 R
FINISH 125

DEEP SEA DRILLING PROJECT
SCRIPPS INSTITUTION OF OCEANOGRAPHY
UNIVERSITY OF CALIFORNIA, SAN DIEGO
LA JOLLA, CALIFORNIA 92093

TITLE SLEEVE - OUTER BODY CAP
VLHPC

SURFACE TREATMENT PARKOLUBRITE	MATERIAL 4130 C.D.	DRAWN BY LH	DATE 7/2/80	CHECKED	APPROVED
HEAT TREATMENT RC-30-32	PART NO. OP4312-2	SIZE DWG. NO. A-OP4312-			REV. 2

REVISIONS

NO.	DESCRIPTION	DATE	BY	CH.	APR.

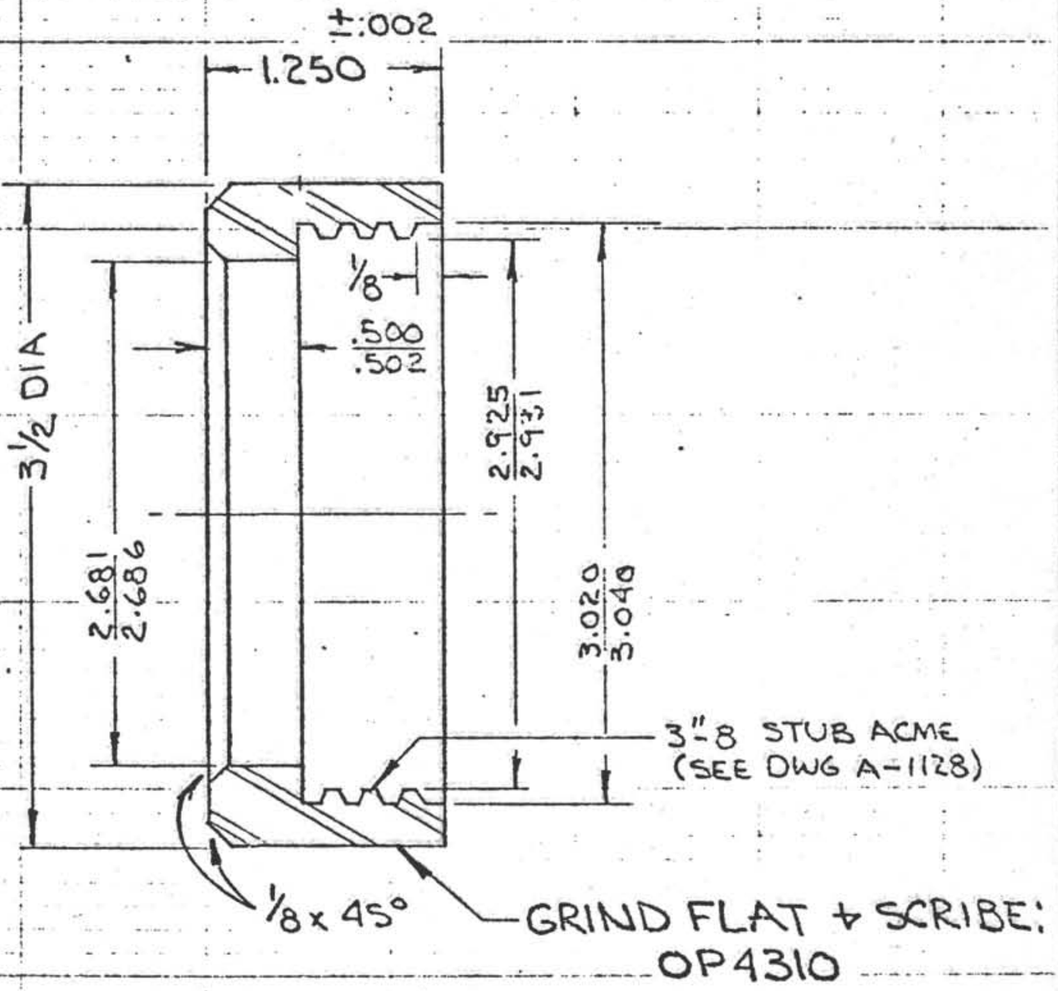

CONCENTRICITY:
ALL DIAMETERS
TIR .002

NOTES:
BREAK ALL SHARP EDGES
RADIUS ALL INSIDE CORNERS

TOLERANCES UNLESS NOTED FRACTIONS ± 1/64 DECIMALS ±.005 ANGLES ± 1/2° CORNERS 1/64 x 45° or 1/64 R FINISH 125	DEEP SEA DRILLING PROJECT SCRIPPS INSTITUTION OF OCEANOGRAPHY UNIVERSITY OF CALIFORNIA, SAN DIEGO LA JOLLA, CALIFORNIA 92093 TITLE RETAINER RING · OUTER BODY CAP · VLHPC				
SURFACE TREATMENT PARCOLUBRITE	MATERIAL 4130 C.D.	DRAWN BY W	DATE 7/12/[illegible]	CHECKED	APPROVED
HEAT TREATMENT Rc 30-32	PART NO. OP4310	SIZE DWG. NO. A-OP4310-			REV. 0

REVISIONS

NO.	DESCRIPTION	DATE	BY	CH.	APR.
1	LOCTITE WAS #431	4.12.82	RK		

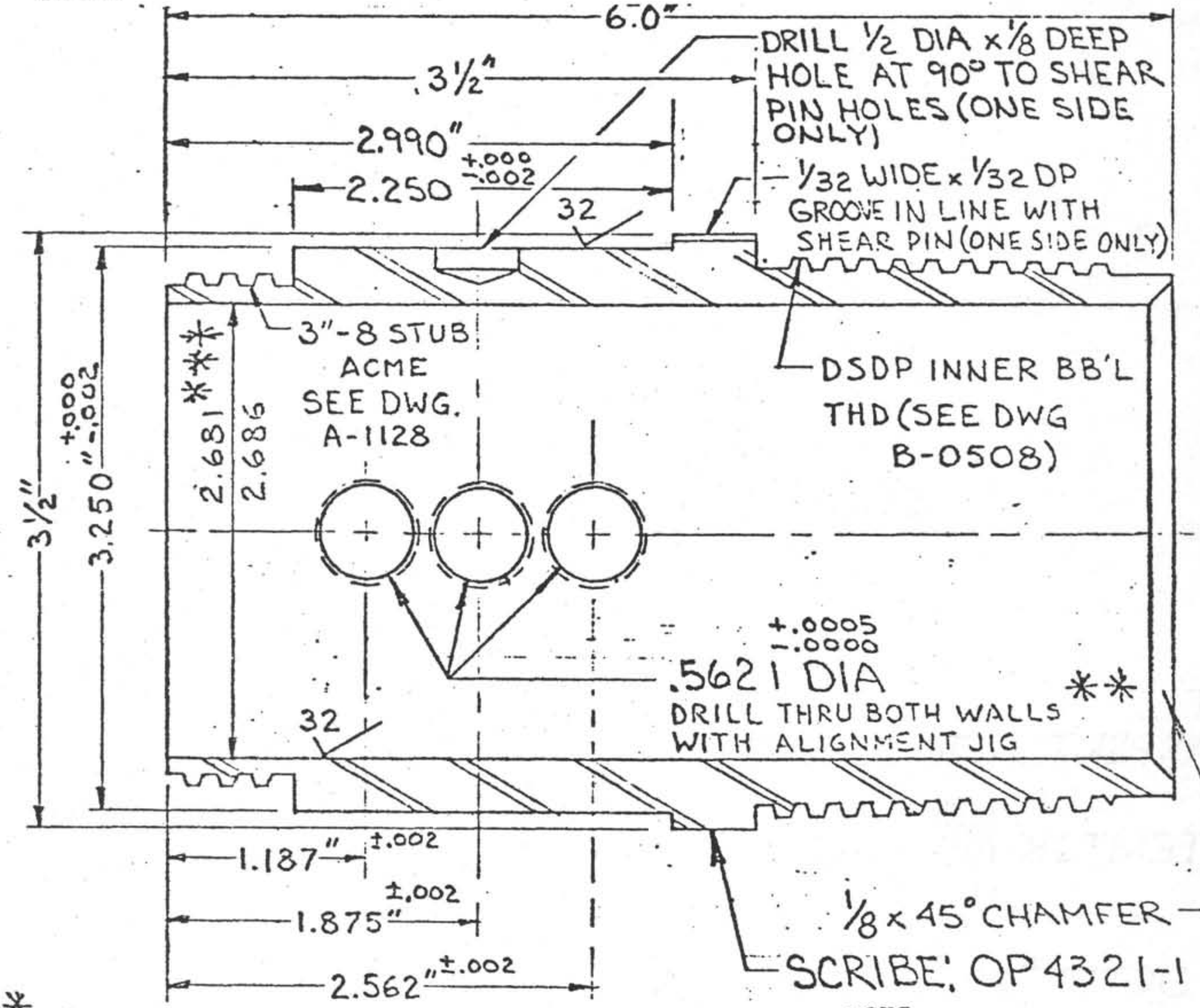

**C'BORE .626 DIA x .087 DEEP
**TO SLIP FIT OVER SHAFT O.D's.

NOTE:
BREAK ALL SHARP EDGES
RADIUS ALL INSIDE CORNERS

*H.T. PRIOR TO LOCTITE & FINISH MACHINE

△1 LOCTITE #271 N/P/N OP4318

TOLERANCES UNLESS NOTED
FRACTIONS ± 1/64
DECIMALS ± .005
ANGLES ± 1/2°
CORNERS 1/64 x 45° or 1/64 R
FINISH 125

DEEP SEA DRILLING PROJECT
SCRIPPS INSTITUTION OF OCEANOGRAPHY
UNIVERSITY OF CALIFORNIA, SAN DIEGO
LA JOLLA, CALIFORNIA 92093

BODY-OUTER BODY CAP (7/32)
VLHPC

SURFACE TREATMENT PARCOLUBRITE	MATERIAL 4130 C.D.	DRAWN BY LH	DATE 4-23-81	CHECKED	APPROVED
HEAT TREATMENT RC-36-38*	PART NO. OP4321-1	SIZE DWG. NO. A-OP4321-			REV. 1

REVISIONS

NO.	DESCRIPTION	DATE	BY	CH.	APR.
1	.228 WAS .195, CHAM. WAS ON INSIDE	5-7-81	RK		
2	.087 WAS FROM LOWER SURFACE LOCTITE WAS #431	4-6-82	RK		

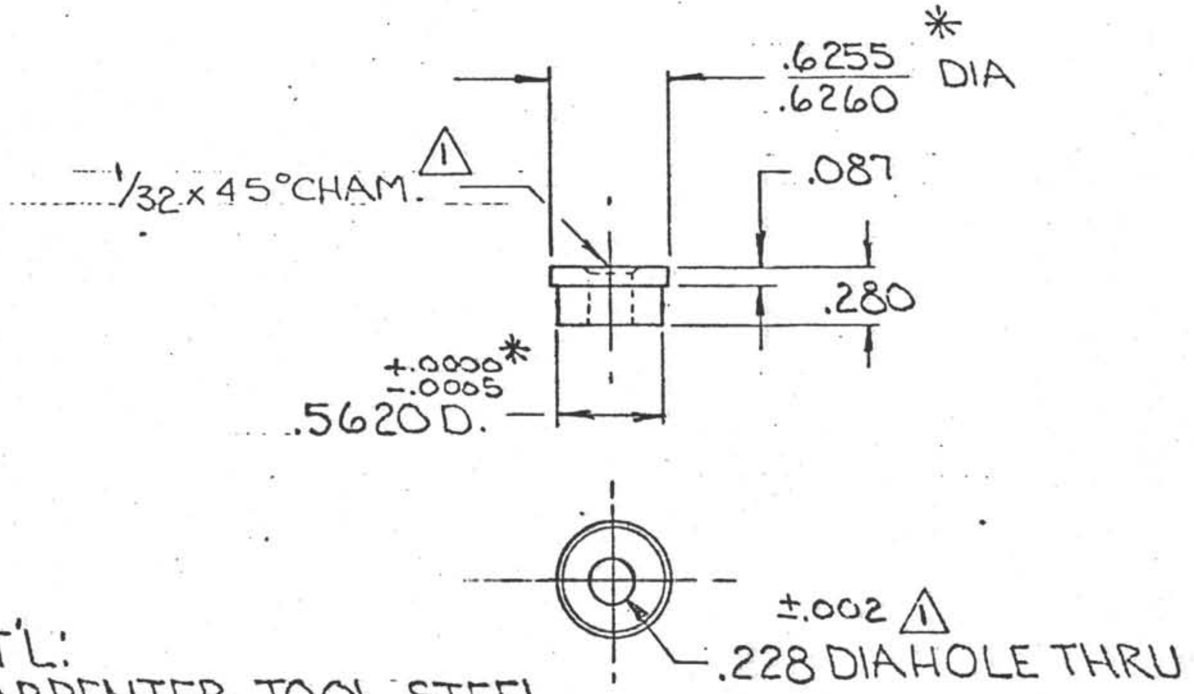

MAT'L:
CARPENTER TOOL STEEL
H.T.
STENTOR-OIL HARD

* 2 LOCTITE #271 W/P/N OP4321, GRIND FLUSH AFTER INSTALLATION

DO NOT SCALE

CONCENTRICITY ALL DIAMETERS: TIR .003

TOLERANCES UNLESS NOTED FRACTIONS ± 1/64 DECIMALS ± .005 ANGLES ± 1/2° CORNERS 1/64 x 45° or 1/64 R FINISH 125 ✓	DEEP SEA DRILLING PROJECT SCRIPPS INSTITUTION OF OCEANOGRAPHY UNIVERSITY OF CALIFORNIA, SAN DIEGO LA JOLLA, CALIFORNIA 92093
	TITLE BUSHING, SHEAR, 7/32 ~OUTER BODY CAP~ VLHPC

SURFACE TREATMENT	MATERIAL	DATE	BY	CHECKED	APPROVED
—⊖—	SEE DWG	4-23-81	RK		

HEAT TREATMENT	SCALE	REQ'D/ASS'Y	PART NO.	DWG. NO	(REV)
SEE DWG	1:1	6	OP4318-2	A-OP4318	-2

REVISIONS

NO.	DESCRIPTION	DATE	BY	CH.	APR.
1	WAS: 3/16 DIA,	5.7.81	RK		

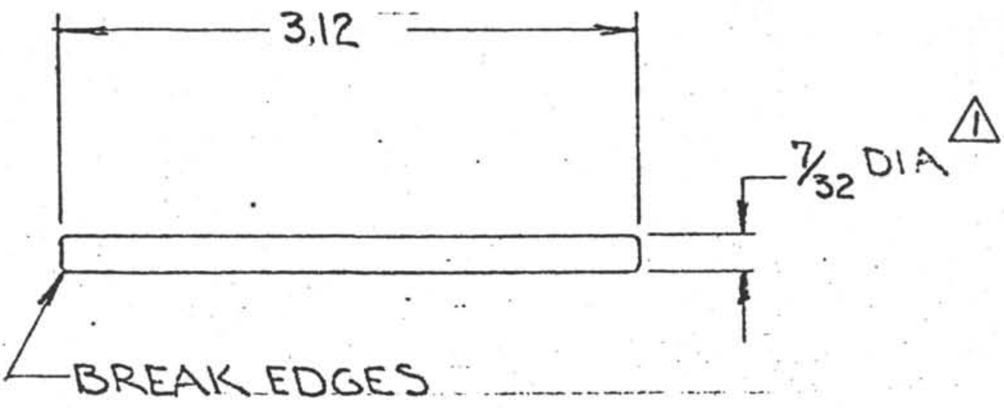

MAT'L:
1018 C.R. STEEL, TENSILE 85,000 PSI, YIELD 70,000 PSI
ALT. MAT'L:
12 L14 LEADLOY A, TENSILE 78,000 PSI, YIELD 70,000 PSI
NOTE:
PINS ARE IN DOUBLE SHEAR.

DO NOT SCALE **CONCENTRICITY ALL DIAMETERS: TIR .003**

TOLERANCES
UNLESS NOTED
FRACTIONS ± 1/64
DECIMALS ±.005
ANGLES ± 1/2°
CORNERS 1/64 x 45°
or 1/64 R
FINISH 125

DEEP SEA DRILLING PROJECT
SCRIPPS INSTITUTION OF OCEANOGRAPHY
UNIVERSITY OF CALIFORNIA, SAN DIEGO
LA JOLLA, CALIFORNIA 92093

TITLE 7/32 SHEAR PIN
~VLHPC~

SURFACE TREATMENT —⊖—	MATERIAL SEE ABOVE	DATE 4.23.81	BY RK	CHECKED	APPROVED
HEAT TREATMENT —⊖—	SCALE 1:1	REQ'D/ASS'Y OPTIONAL	PART NO. OP4357-1	DWG. NO. A-OP4357-1	(REV.)

REVISIONS					
NO.	DESCRIPTION	DATE	BY	CH.	APR.
1	I.D. WAS 63	3·5·81	R.		
2	ADDED +1/16 -0 TOL	4·7·91	RK		

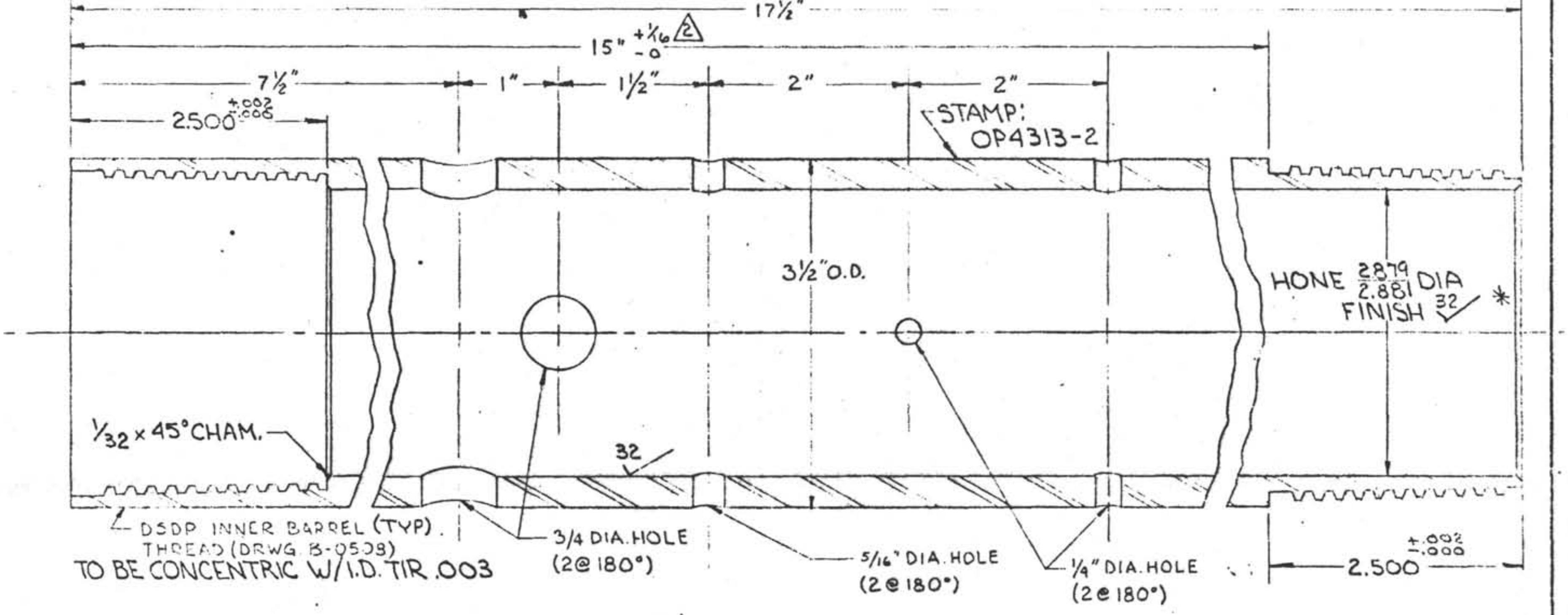

1 REQ'D

NOTE:
BREAK ALL SHARP EDGES
RADIUS ALL INSIDE CORNERS

* NYE-CARB ELECTROLESS NICKEL PLATE - .0015/.0020 THICK (I.D. ONLY)
THREADS TO BE STOPPED OFF AND NOT PLATED

** 4135 TUBE 3½ × 2½

NOTE:
BREAK ALL SHARP EDGES
RADIUS ALL INSIDE CORNERS

TOLERANCES UNLESS NOTED FRACTIONS ± 1/64 DECIMALS ± .005 ANGLES ± 1/2° CORNERS 1/64 × 45° or 1/64 R FINISH 125	DEEP SEA DRILLING PROJECT SCRIPPS INSTITUTION OF OCEANOGRAPHY UNIVERSITY OF CALIFORNIA, SAN DIEGO LA JOLLA, CALIFORNIA 92093				
	TITLE OUTER BODY VENT VLHPC				
SURFACE TREATMENT PARKOLUBRITE	MATERIAL ** 4130 OR 4135 C.D.	DRAWN BY	DATE	CHECKED	APPROVED
HEAT TREATMENT RC-30-32	PART NO. OP4313-2	SIZE DWG. NO. B-OP4313			REV. 2

REVISIONS					
NO.	DESCRIPTION	DATE	BY	CH.	APR.
1	I.D. WAS 63	3·5·8	P!	[illegible]	[illegible]
2	ADDED +1/16 -0 TOL	4·7·81	RK	[illegible]	[illegible]

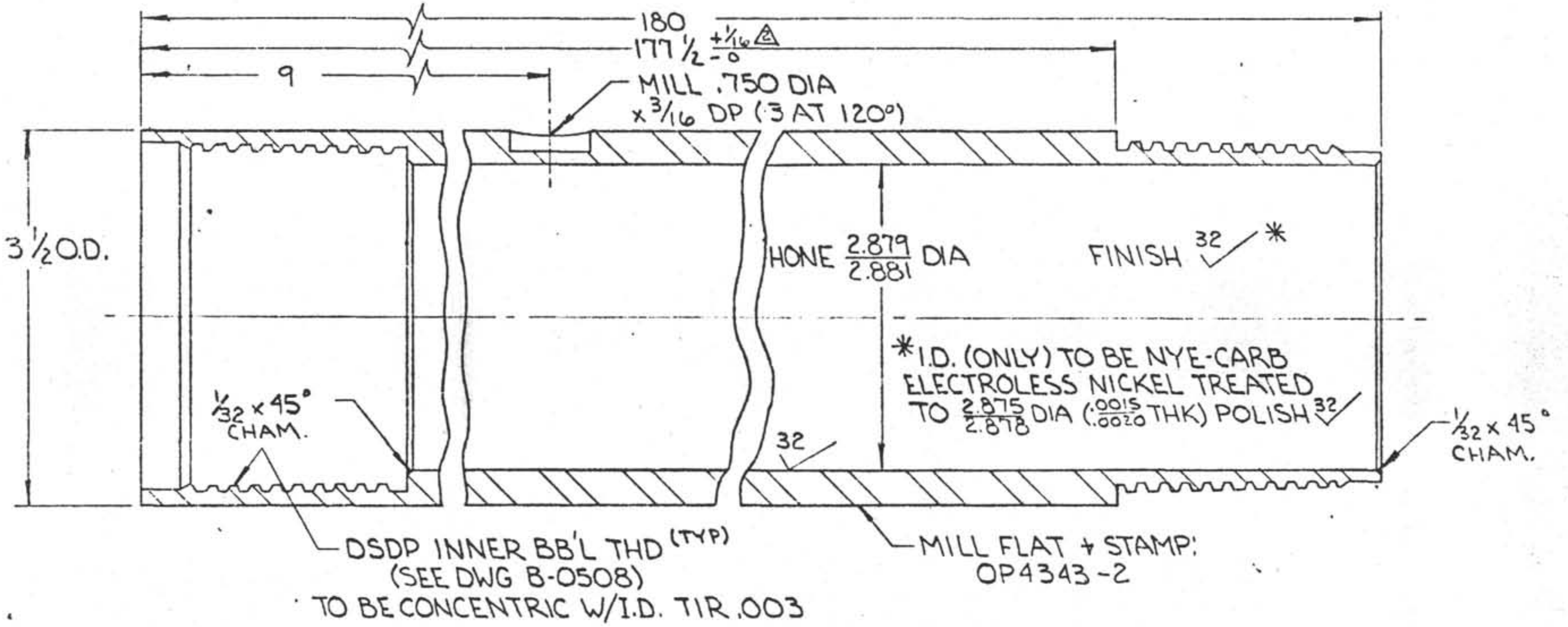

NO. REQ'D
3.5m = 0
5.0m = 1
6.5m = 0
8.0m = 1
9.5m = 2

NOTE:
BREAK ALL SHARP EDGES
RADIUS ALL INSIDE CORNERS

DO NOT SCALE

~~CONCENTRICITY ALL DIAMETERS: TIR .003~~

TOLERANCES UNLESS NOTED FRACTIONS ± 1/64 DECIMALS ± .005 ANGLES ± 1/2° CORNERS 1/64 x 45° or 1/64 R FINISH 125	DEEP SEA DRILLING PROJECT SCRIPPS INSTITUTION OF OCEANOGRAPHY UNIVERSITY OF CALIFORNIA, SAN DIEGO LA JOLLA, CALIFORNIA 92093					
	TITLE 4.5m OUTER BODY LINK ~VLHPC~					
SURFACE TREATMENT PARKOLUBRITE	MATERIAL 4130 C.D.		DATE 0·28·80	BY RK	CHECKED [illegible]	APPROVED [illegible]
HEAT TREATMENT	SCALE 1:1	REQ'D/ASS'Y SEE DWG	PART NO. CP4343-2		DWG NO. B-OP4343-2	

REVISIONS

NO.	DESCRIPTION	DATE	BY	CH.	APR.
1	I.D. WAS 63	3·5·81	RK		
2	ADDED +1/16 -0 TOL.	4·7·81	RK		

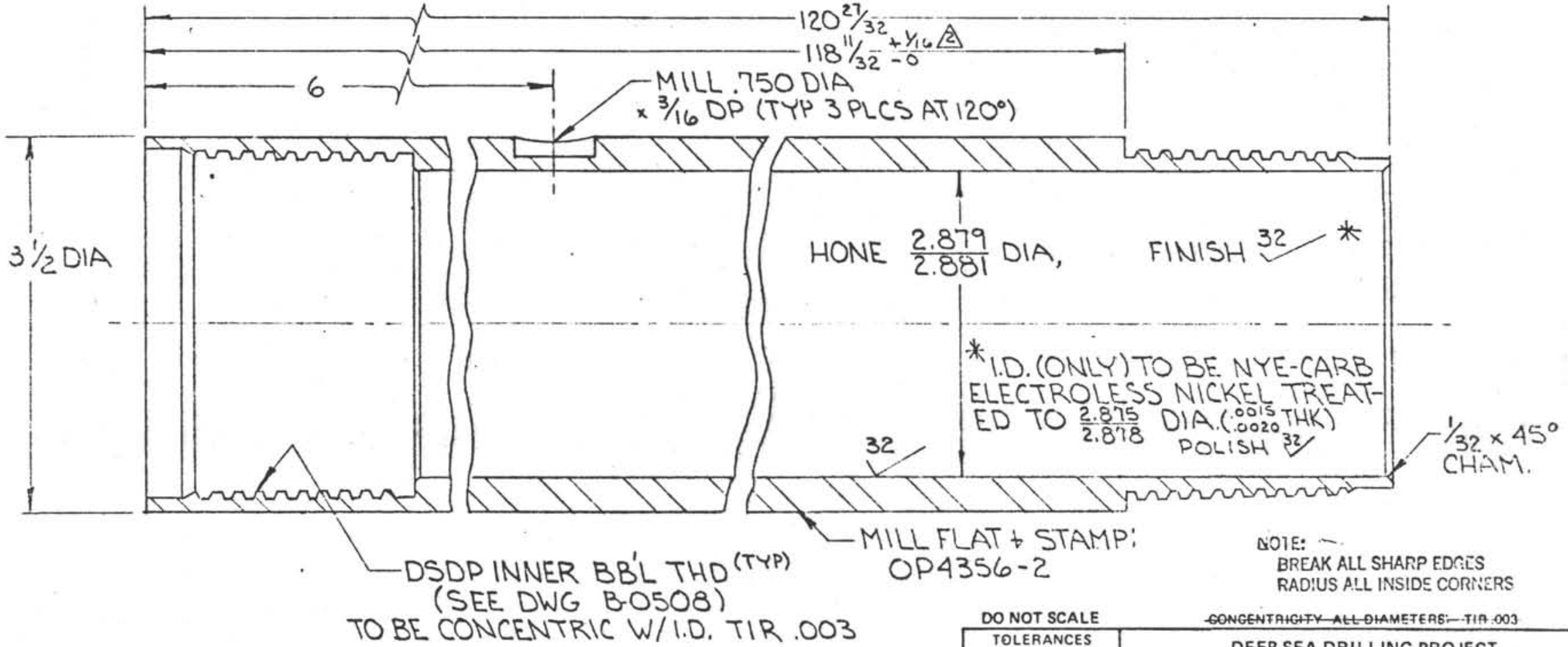

NOTE: —
BREAK ALL SHARP EDGES
RADIUS ALL INSIDE CORNERS

NO. REQ'D
3.5m = 1
5.0m = 0
6.5m = 2
8.0m = 1
9.5m = 0

DO NOT SCALE

~~CONCENTRICITY ALL DIAMETERS: TIR .003~~

TOLERANCES UNLESS NOTED
FRACTIONS ± 1/64
DECIMALS ± .005
ANGLES ± 1/2°
CORNERS 1/64 x 45° or 1/64 R
FINISH 125

DEEP SEA DRILLING PROJECT
SCRIPPS INSTITUTION OF OCEANOGRAPHY
UNIVERSITY OF CALIFORNIA, SAN DIEGO
LA JOLLA, CALIFORNIA 92093

TITLE 3m OUTER BODY LINK ~VLHPC~

SURFACE TREATMENT	MATERIAL	DATE	BY	CHECKED	APPROVED
PAN-KOLUBRITE	4130 C.D.	10·27·8	RK		

HEAT TREATMENT	SCALE	REQ'D/ASS'Y	PART NO.	DWG NO.	REV.
	1:1	SEE DWG	OP 4356 - 2	B-OP4356 - 2	

REVISIONS

NO.	DESCRIPTION	DATE	BY	CH.	APR.
1	I.D. FINISH WAS 63	3-5-81	RK		
2	1 5/16 WAS 1.26	4-21-81	RK		

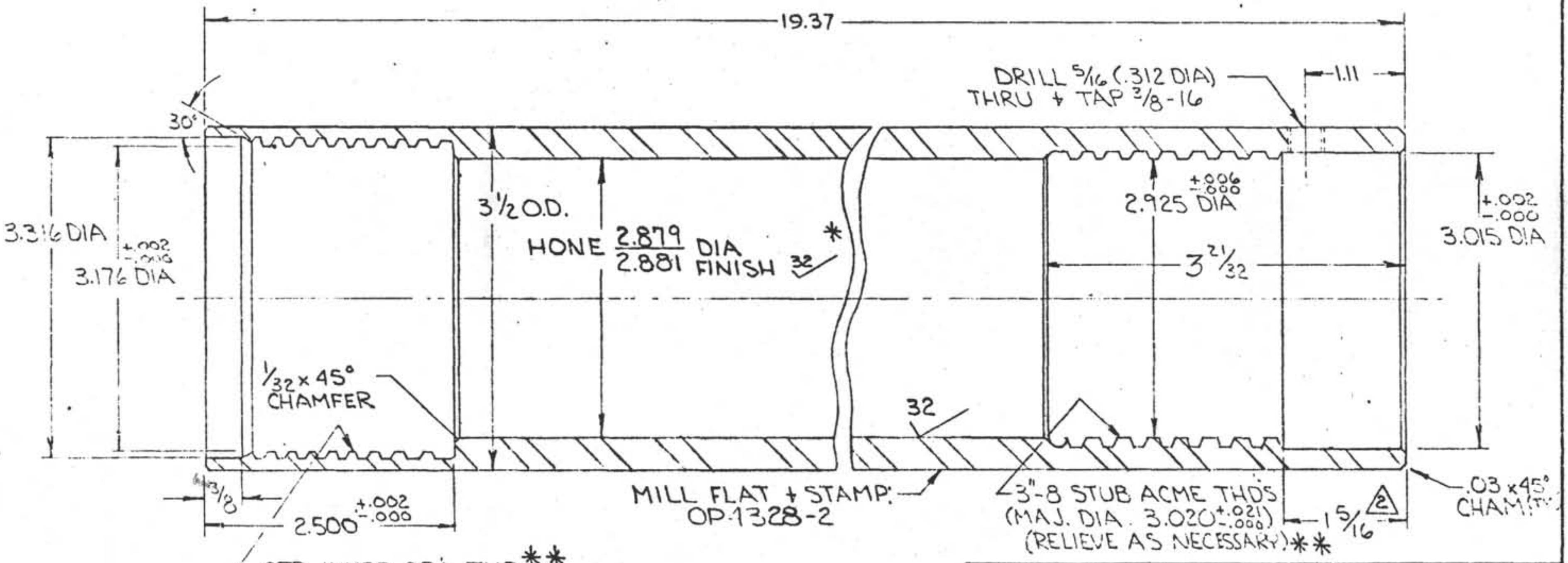

*NYE-CARB ELECTROLESS NICKEL PLATE .0015/.0020 THICK ON I.D. ONLY. THREADS TO BE STOPPED OFF AND NOT PLATED. ($\frac{2.875}{2.878}$ DIA)

** TO BE CONCENTRIC W/I.D. TIR .003

NOTE:
BREAK ALL SHARP EDGES
RADIUS ALL INSIDE CORNERS

TOLERANCES UNLESS NOTED
FRACTIONS ± 1/64
DECIMALS ± .005
ANGLES ± 1/2°
CORNERS 1/64 x 45° or 1/64 R
FINISH 125

DEEP SEA DRILLING PROJECT
SCRIPPS INSTITUTION OF OCEANOGRAPHY
UNIVERSITY OF CALIFORNIA, SAN DIEGO
LA JOLLA, CALIFORNIA 92093

TITLE: LOWER OUTER BODY VL-HPC

SURFACE TREATMENT	MATERIAL	DRAWN BY	DATE	CHECKED	APPROVED
PARKOLUBRITE	4130 C.D.		7-24-8	RC	

HEAT TREATMENT	PART NO.	SIZE DWG. NO	REV.
—	OP4328-2	B-OP4328-	2

REVISIONS					
NO.	DESCRIPTION	DATE	BY	CH.	APR.
1	O-RING #2-334 OMITTED. ADD O-RING 231, 2 1/8-8 THD, .332 x 2.63 D.	11-27-76	R.K		
2.	OMIT O-RING GROVE $\frac{.281}{.286}$ x 2.675 D	6-4-79	RK		
3	.19 WAS .06, ADD CONCEN. TOL.	6-7-79	RK		
4	4.25 WAS 3.78, .33 WAS .19, 6.87 WAS 6.60, .77 WAS .50, ADD .27 x 2.15 DIA 2.89 WAS 2.62, $\frac{53}{64}$ WAS .56.	7-13-79	RK		
5	REDRAWN, 6.89 WAS 6.87, 21/64 WAS .33., 1 9/16 WAS 1.560, 2 41/64 WAS 2.64 WAS A 'R' DRAWING	8-27-80	DR.	[illegible]	K
6	2.050 I.D. WAS 2.000	9.12.81	RK		IV
7	1.540 WAS 1.115, 1.265 WAS 1.252 $^{+.002}_{-.000}$	5.13.81	RK	[illegible]	[illegible]
8	1.650 WAS 1.115 (ERROR)	1.13.83	RK	[illegible]	[illegible]

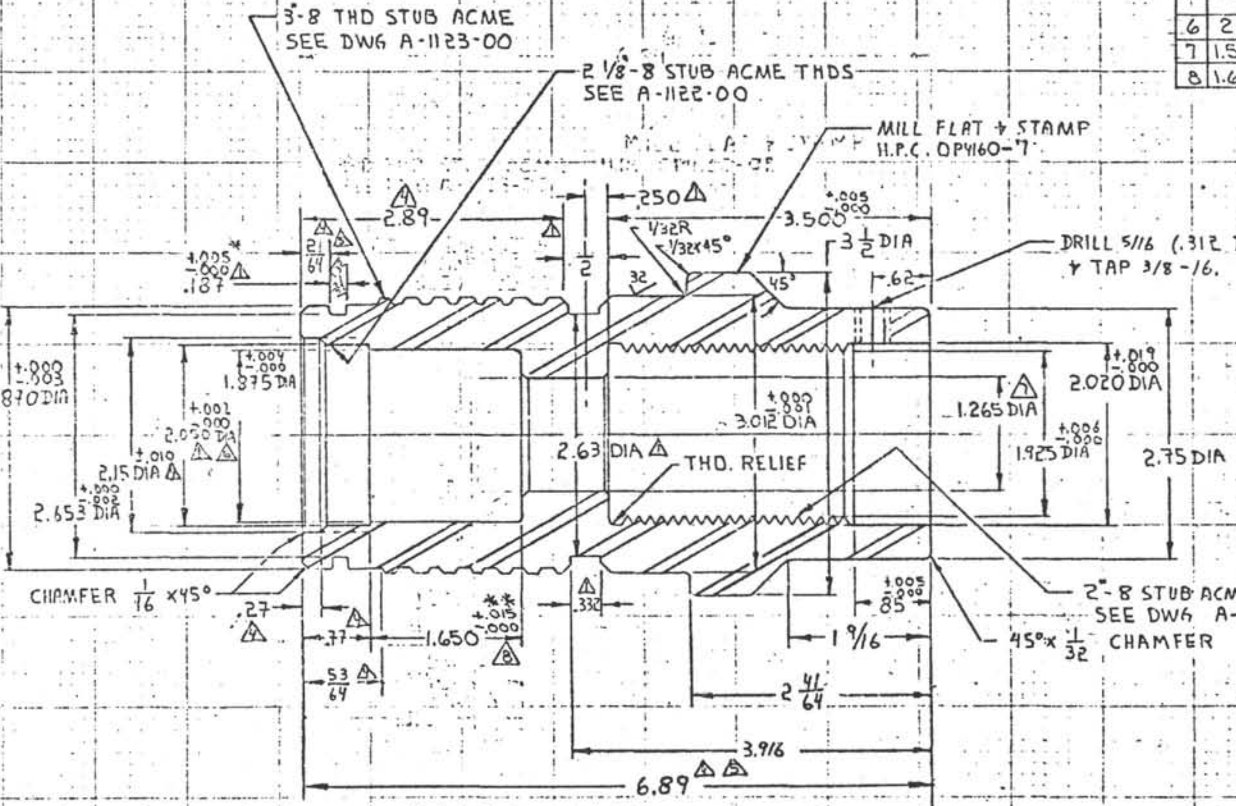

** FOR DEEP POLYPACK TYPE 'B' SEAL
No. 31201250-500

* FOR O-RING NO 2-231

NOTE:
BREAK ALL SHARP EDGES
RADIUS ALL INSIDE CORNERS

CONCENTRICITY
ALL DIAMETERS
TIR .003

MAT'L (REF) YIELD: 153.000 PSI
4140 STEEL (REF) IZOD: 48 FT. LBS.

TOLERANCES
UNLESS NOTED
FRACTIONS ± 1/64
DECIMALS ± .005
ANGLES ± 1/2°
CORNERS 1/64 x 45°
or 1/64 R
FINISH 125

DEEP SEA DRILLING PROJECT
SCRIPPS INSTITUTION OF OCEANOGRAPHY
UNIVERSITY OF CALIFORNIA, SAN DIEGO
LA JOLLA, CALIFORNIA 92093

TITLE
OUTER SEAL SUB H.P.C. (15 FT.)

SURFACE TREATMENT: PARKO LUBRIZE
MATERIAL: 4140 STL.
DRAWN BY: D.R.
DATE: 8-80
HEAT TREATMENT: 34-32 Rc
PART NO.: OP4160-8
SIZE DWG NO.: C-0721-
REV.: 8

REVISIONS

NO.	DESCRIPTION	DATE	BY	CH.	APR.
1	.76 WAS .50	10·13·8	RK		
2	1.265 WAS 1.252	5·13·81	RK		
3	1 5/16 WAS 1.265	6·25·81	RK		

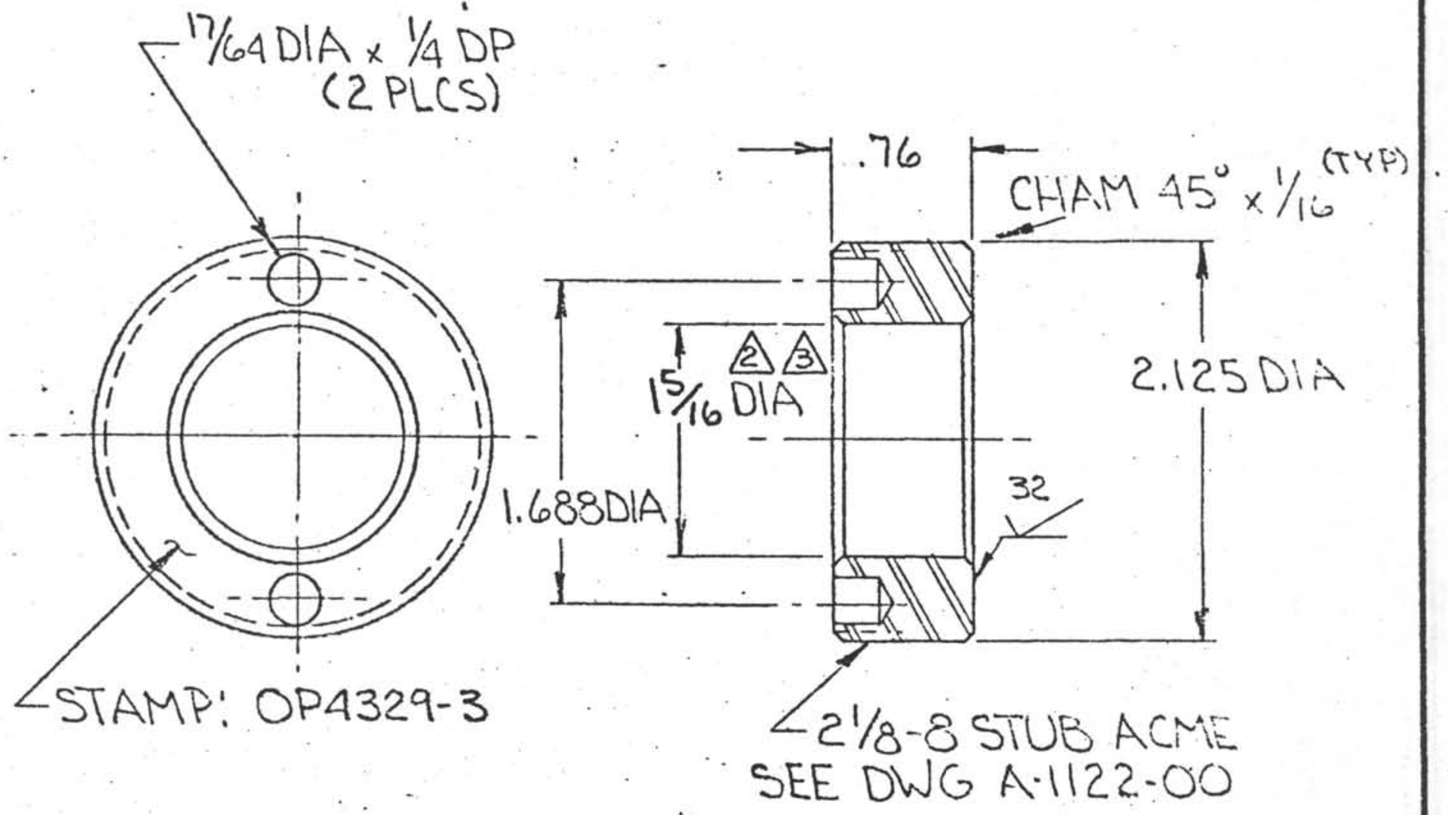

CONCENTRICITY:
ALL DIAMETERS
TIR .003

NOTE:
BREAK ALL SHARP EDGES
RADIUS ALL INSIDE CORNERS

TOLERANCES UNLESS NOTED FRACTIONS ± 1/64 DECIMALS ± .005 ANGLES ± 1/2° CORNERS 1/64 x 45° or 1/64 R FINISH 125	DEEP SEA DRILLING PROJECT SCRIPPS INSTITUTION OF OCEANOGRAPHY UNIVERSITY OF CALIFORNIA, SAN DIEGO LA JOLLA, CALIFORNIA 92093				
	TITLE OUTER SEAL RETAINER ~ VL- H·P·C ~				
SURFACE TREATMENT PARKOLUBRITE	MATERIAL 4140 STEEL	DRAWN BY RK	DATE 3·21·7	CHECKED	APPROVED
HEAT TREATMENT 34-38 Kc	PART NO. OP4363-3	SIZE DWG. NO. A-OP4363-			REV. 3

REVISIONS

NO.	DESCRIPTION	DATE	BY	CH.	APR.
1	.055 WAS 9/64, .196 WAS 9/32, 1.347/1.285	2.5.81	RK		

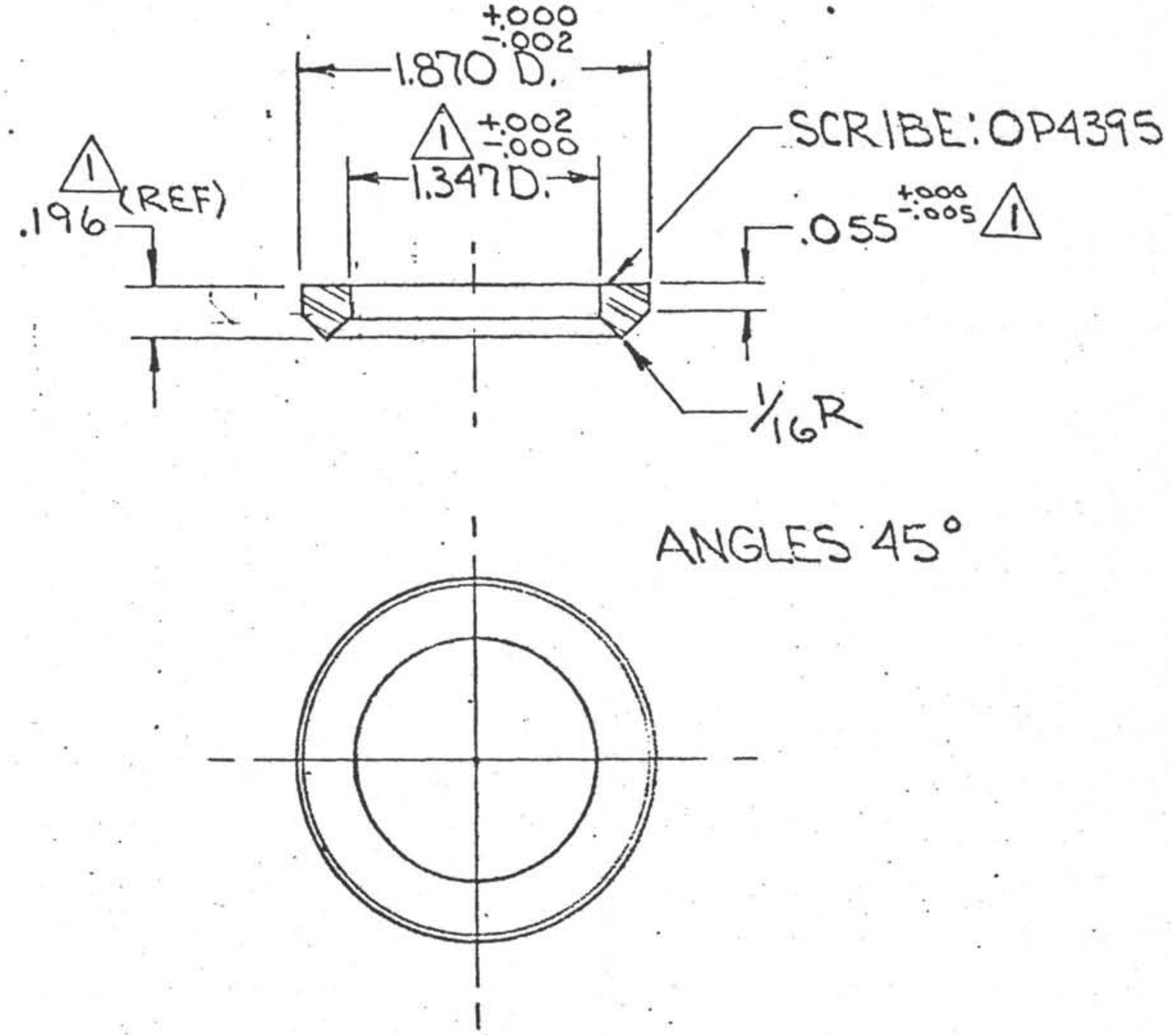

DO NOT SCALE

CONCENTRICITY ALL DIAMETERS: TIR .003

TOLERANCES
UNLESS NOTED
FRACTIONS ± 1/64
DECIMALS ± .005
ANGLES ± 1/2°
CORNERS 1/64 x 45°
or 1/64 R
FINISH 125 ✓

DEEP SEA DRILLING PROJECT
SCRIPPS INSTITUTION OF OCEANOGRAPHY
UNIVERSITY OF CALIFORNIA, SAN DIEGO
LA JOLLA, CALIFORNIA 92093

TITLE
MALE ADAPTER - OUTER SEAL SUB
~VLHPC~

SURFACE TREATMENT	MATERIAL		DATE	BY	CHECKED	APPROVED
	304 S.S.		10.17.80	RK		
HEAT TREATMENT	SCALE	REQ'D/ASS'Y	PART NO.		DWG. NO. (REV.)	
ANNEALED	1:1	1	OP4394 - 1		A-OP4394 - 1	

REVISIONS

NO.	DESCRIPTION	DATE	BY	CH.	APR.
1	.140 WAS 1/4	2·5·81	RK		
2	1.347 WAS 1.285 DIA	4·21·81	RK		

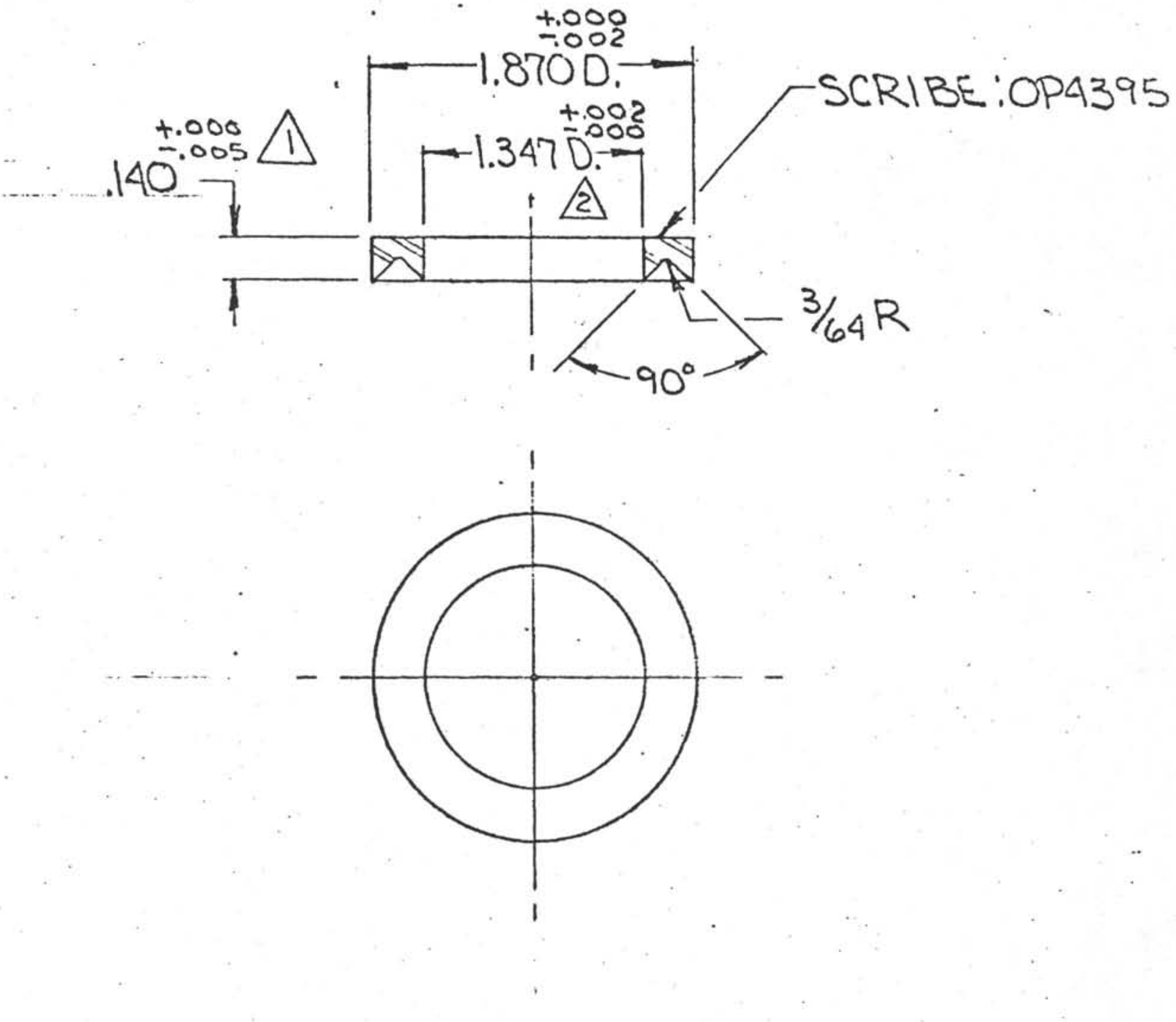

DO NOT SCALE

CONCENTRICITY ALL DIAMETERS: TIR .003

TOLERANCES
UNLESS NOTED
FRACTIONS ± 1/64
DECIMALS ± .005
ANGLES ± 1/2°
CORNERS 1/64 x 45°
or 1/64 R
FINISH 125✓

DEEP SEA DRILLING PROJECT
SCRIPPS INSTITUTION OF OCEANOGRAPHY
UNIVERSITY OF CALIFORNIA, SAN DIEGO
LA JOLLA, CALIFORNIA 92093

TITLE
FEMALE ADAPTER-OUTER SEAL SUB
~VLHPC~

SURFACE TREATMENT:
MATERIAL: 304 S.S.
DATE: 10·17·80
BY: RK
CHECKED:
APPROVED:

HEAT TREATMENT: ANNEALED
SCALE: 1:1
REQ'D/ASS'Y: 1
PART NO.: OP4395-2
DWG. NO.: A-OP4395-2
(REV.)

REVISIONS

NO.	DESCRIPTION	DATE	BY	CH.	APR.
1	1.347 WAS 1.285	4-21-81	RK		

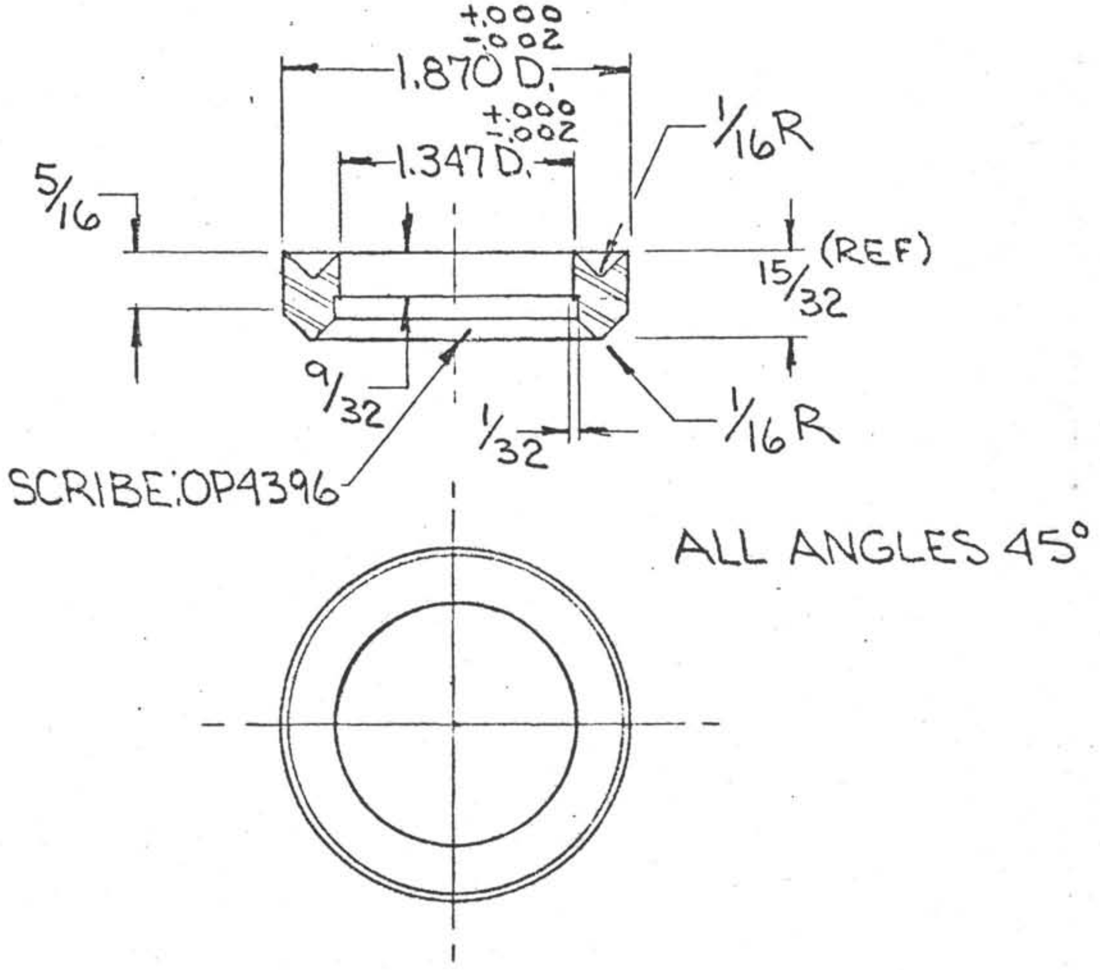

DO NOT SCALE

CONCENTRICITY ALL DIAMETERS: TIR .003

TOLERANCES
UNLESS NOTED
FRACTIONS ± 1/64
DECIMALS ± .005
ANGLES ± 1/2°
CORNERS 1/64 x 45°
or 1/64 R
FINISH 125✓

DEEP SEA DRILLING PROJECT
SCRIPPS INSTITUTION OF OCEANOGRAPHY
UNIVERSITY OF CALIFORNIA, SAN DIEGO
LA JOLLA, CALIFORNIA 92093

TITLE V-SPACER - MALE-FEMALE
~VLHPC~ OUTER SEAL SUB

SURFACE TREATMENT	MATERIAL	DATE	BY	CHECKED	APPROVED
	304 SS	10-17-80	RK		

HEAT TREATMENT	SCALE	REQ'D/ASS'Y	PART NO.	DWG. NO. (REV.)
ANNEALED	1:1		OP4396	A-OP4396-[illegible]

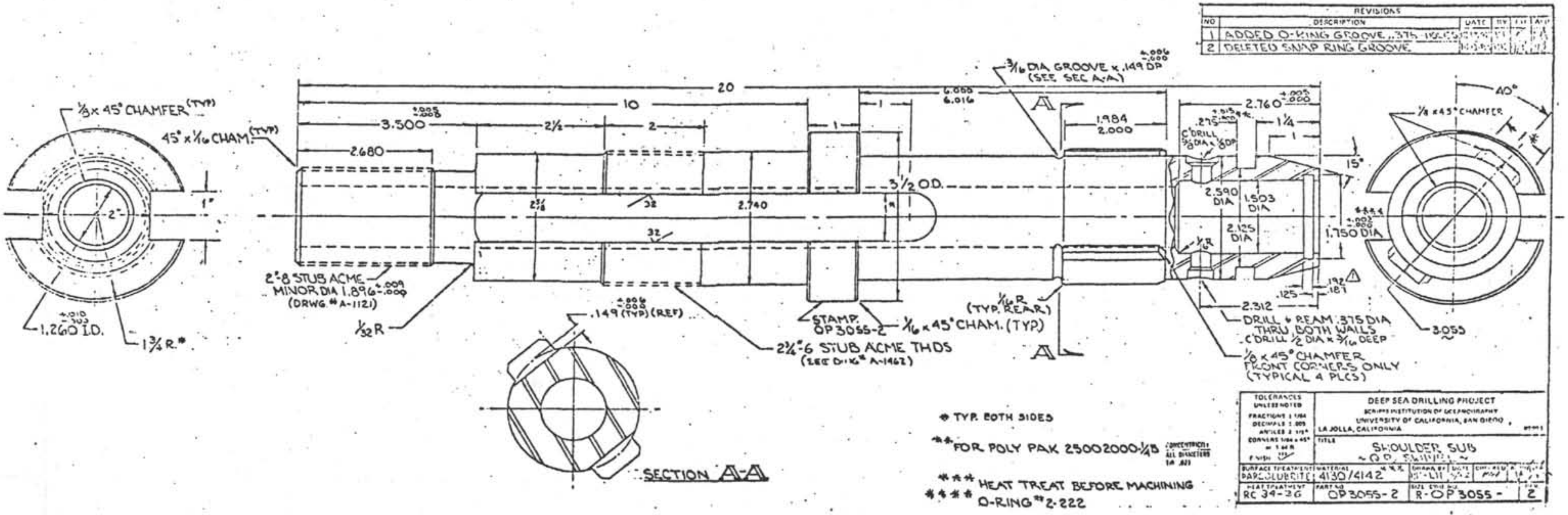
REVISIONS
NO | DESCRIPTION | DATE | BY | CH | APP
1 | ADDED O-RING GROOVE, .375 [illegible]
2 | DELETED SNAP RING GROOVE
1/8 x 45° CHAMFER (TYP)
45° x 1/16 CHAM. (TYP)
2"
1"
1.260 I.D. +.010 -.000
1 3/4 R.*
20
10
3.500 +.005 -.000
2.680
2 1/2
2
1
1
6.000 6.016
1.984 2.000
3/16 DIA GROOVE x .149 DP +.006 -.000 (SEE SEC A-A)
A
A
3 1/2 O.D.
2 3/8
32
2.740
32
2"-8 STUB ACME MINOR DIA 1.896 +.009 -.000 (DRWG. # A-1121)
1/32 R
.149 +.006 -.000 (TYP) (REF)
2 1/4"-6 STUB ACME THDS (SEE D.K. A-1462)
STAMP. OP3055-2
1/16 x 45° CHAM. (TYP.)
1/16 R (TYP. REAR)
2.760 +.005 -.000
.275 +.015 -.000 ****
1 1/4
1
C'DRILL 1/2 DIA x 1/8 DP
15°
2.590 DIA
1.503 DIA
2.125 DIA
1/8 R
1.750 DIA +.002 -.000 ****
.192 .187
.125
2.312
DRILL + REAM .375 DIA THRU BOTH WALLS
C'DRILL 1/2 DIA x 3/16 DEEP
1/8 x 45° CHAMFER FRONT CORNERS ONLY (TYPICAL 4 PLCS)
40°
1/8 x 45° CHAMFER
3.055
SECTION A-A
* TYP. BOTH SIDES
** FOR POLY PAK 25002000-1/4B CONCENTRICITY ALL DIAMETERS TO .001
*** HEAT TREAT BEFORE MACHINING
**** O-RING # 2-222
TOLERANCES UNLESS NOTED
FRACTIONS ± 1/64
DECIMALS ± .005
ANGLES ± 1/2°
CORNERS 1/64 x 45° = 1/64 R
FINISH 125
DEEP SEA DRILLING PROJECT
SCRIPPS INSTITUTION OF OCEANOGRAPHY
UNIVERSITY OF CALIFORNIA, SAN DIEGO
LA JOLLA, CALIFORNIA
TITLE
SHOULDER SUB
SURFACE TREATMENT PARCOLUBRITE
MATERIAL 4130/4142 ***
DRAWN BY
DATE
CHECKED
HEAT TREATMENT RC 34-36
PART NO OP3055-2
SIZE DWG NO R-OP3055-
REV 2

REVISIONS					
NO	DESCRIPTION	DATE	BY	CH	APR
1	ADD 1/32 x 1/32 GROOVE	3·9·81	RK		
2	ADD DEBURR + RADIUS NOTES, 2.720/7° REDRAWN.	4·3·81	RK		
3	ADD: WELD DIAGRAM, MFG PROC., Rc WAS 28-32, 4130 WAS 4140	6·30·81	RK		
4	DELETE WELDING, MFG. FROM 1 PC.	8·19·81	RK		
5	ADD 1/16R, WAS 1/4 R A PLCS	4·2·82	RK	DH	DH

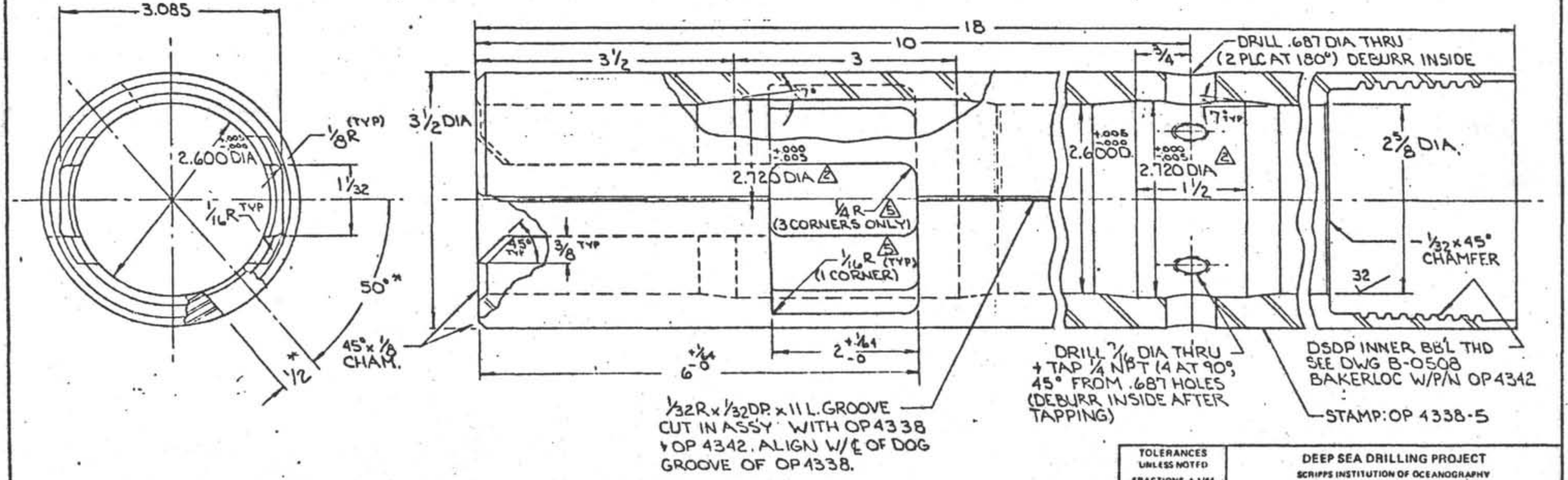

* TYP 2 PLCS AT 180°

RADIUS ALL SHARP CORNERS AND SHARP EDGES, DEBURR HOLES INSIDE AND OUT. ②

TOLERANCES UNLESS NOTED FRACTIONS ± 1/64 DECIMALS ± .005 ANGLES ± 1/2° CORNERS 1/64 x 45° or 1/64 R FINISH 125	DEEP SEA DRILLING PROJECT SCRIPPS INSTITUTION OF OCEANOGRAPHY UNIVERSITY OF CALIFORNIA, SAN DIEGO LA JOLLA, CALIFORNIA 92093 TITLE QUICK RELEASE CAP SUB ~VLHPC~				
SURFACE TREATMENT PARCOLUCRITE	MATERIAL 4130/4142	DRAWN BY RK	DATE 3·1·81	CHECKED	APPROVED
HEAT TREATMENT 34-36 Rc	PART NO. OP 4338-5	SIZE DWG NO C-OP4338-			REV. 5

OP4338

REVISIONS					
NO.	DESCRIPTION	DATE	BY	CH.	APR.
1	ADD TOL: $^{+.005}_{-.000}$	4-16-81	RK		
2	DELETED 1/2-13 HOLE	7-12-82	RK		
3	2.765 $^{+.000}_{-.005}$ WAS 2.750	12-16-82	RK		

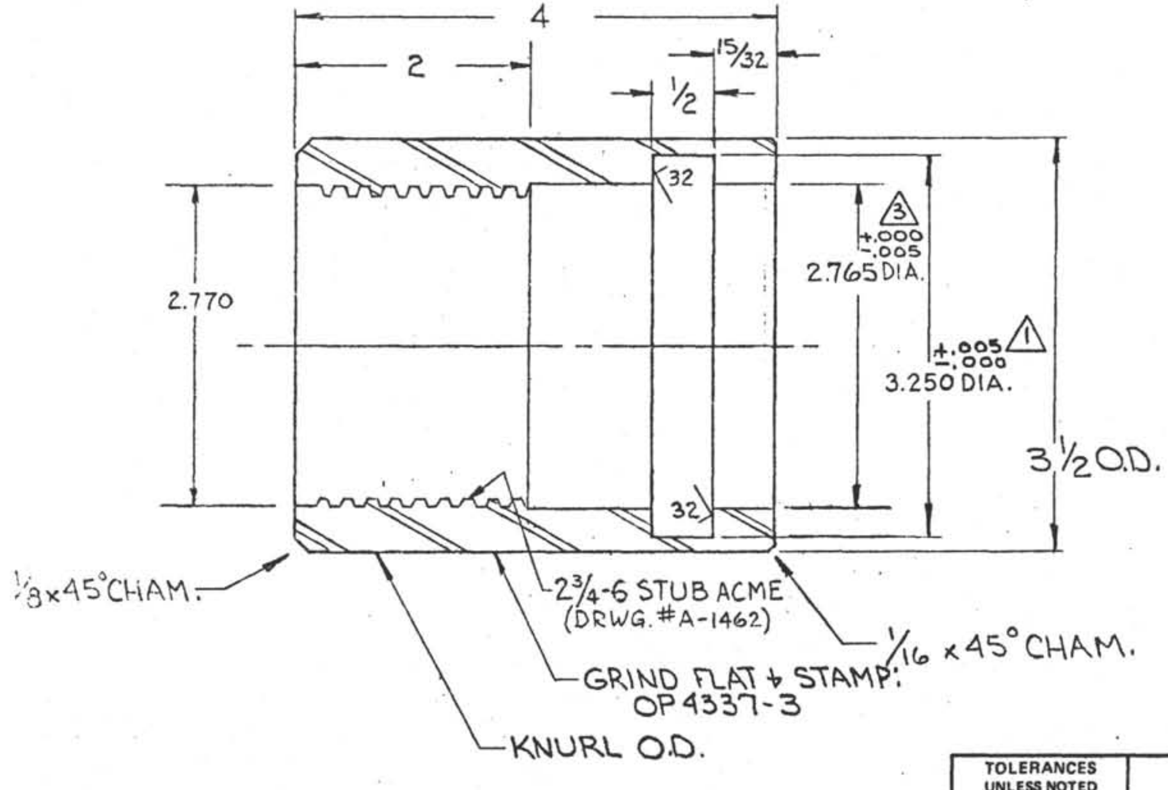

NOTE:
BREAK ALL SHARP EDGES
RADIUS ALL INSIDE CORNERS

CONCENTRICITY
ALL DIAMETERS
TIR .003

*HEAT TREAT BEFORE MACHINING.

TOLERANCES UNLESS NOTED FRACTIONS ± 1/64 DECIMALS ± .005 ANGLES ± 1/2° CORNERS 1/64 x 45° or 1/64 R FINISH 125	DEEP SEA DRILLING PROJECT SCRIPPS INSTITUTION OF OCEANOGRAPHY UNIVERSITY OF CALIFORNIA, SAN DIEGO LA JOLLA, CALIFORNIA 92093 TITLE SLEEVE-QUICK RELEASE SHOULDER SUB ~V.L.-H.P.C.~				
SURFACE TREATMENT PARCOLUBRITE	MATERIAL 4130 H.T. STOCK*	DRAWN BY RK	DATE 6-27-8	CHECKED	APPROVED
HEAT TREATMENT RC 28-32	PART NO. OP4337-3	SIZE DWG. NO. B-OP4337			REV. 3

REVISIONS					
NO.	DESCRIPTION	DATE	BY	CH.	APR.
1	REDESIGNED	10·14·8[illegible]			
2	ADDED STOODY + ASSOC. NOTES	8·4·81	RK		
3	.525 WAS 1.615 R	8·11·81	RK		
4	ADDED H.T. SPEC	2·27·82	RK		

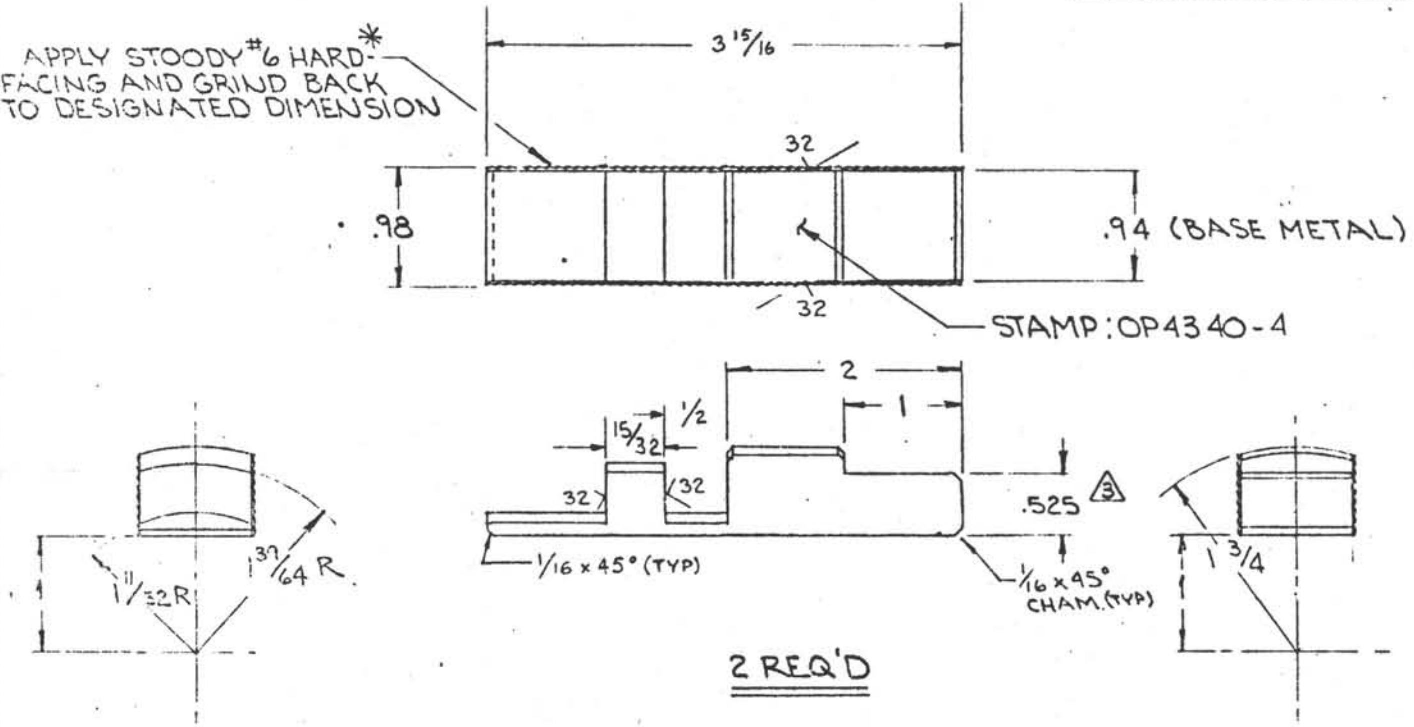

NOTE:
BREAK ALL SHARP EDGES
RADIUS ALL INSIDE CORNERS

*HEAT TREAT / HARDFACE: ④
1. PRE-HEAT TO 600° F.
2. ARC WELD STOODY #6 x 1/16 THK + GRIND (32✓).
3. PRE-HEAT TO 1575° F AND OIL QUINCH.
4. DRAW AT 1200° F FOR CORE HARDNESS OF 28-30 Rc (271-301 BRINELL).

TOLERANCES UNLESS NOTED
FRACTIONS ± 1/64
DECIMALS ± .005
ANGLES ± 1/2°
CORNERS 1/64 x 45° or 1/64 R
FINISH 125✓

DEEP SEA DRILLING PROJECT
SCRIPPS INSTITUTION OF OCEANOGRAPHY
UNIVERSITY OF CALIFORNIA, SAN DIEGO
LA JOLLA, CALIFORNIA 92093

TITLE: DOGS ~ QUICK RELEASE SHOULDER SUB ~V.L. H.P.C. ~

SURFACE TREATMENT	MATERIAL	DRAWN BY	DATE	CHECKED	APPROVED
PARCOLUBRITE	4130 H.T. STOCK	41/RK	6·27		

HEAT TREATMENT	PART NO.	SIZE DWG. NO.	REV.
SEE NOTE	OP4340-4	B - OP4340 -	4

REVISIONS CON'T				
4	ADD GROOVE, 3/8-16 HOLE	3-9-81	[illegible]	[illegible]

REVISIONS

NO.	DESCRIPTION	DATE	BY	CH.	APR.
1	WAS "DOUBLE PIN SUB", REDESIGNED	9-10-[illegible]	[illegible]	[illegible]	[illegible]
2	CHAMFER WAS 1/16 R	11-21-80	RK	[illegible]	[illegible]
3	O-RINGS 2.232 WAS 2.335 (1 PLC)	12-12-80	RK	[illegible]	[illegible]

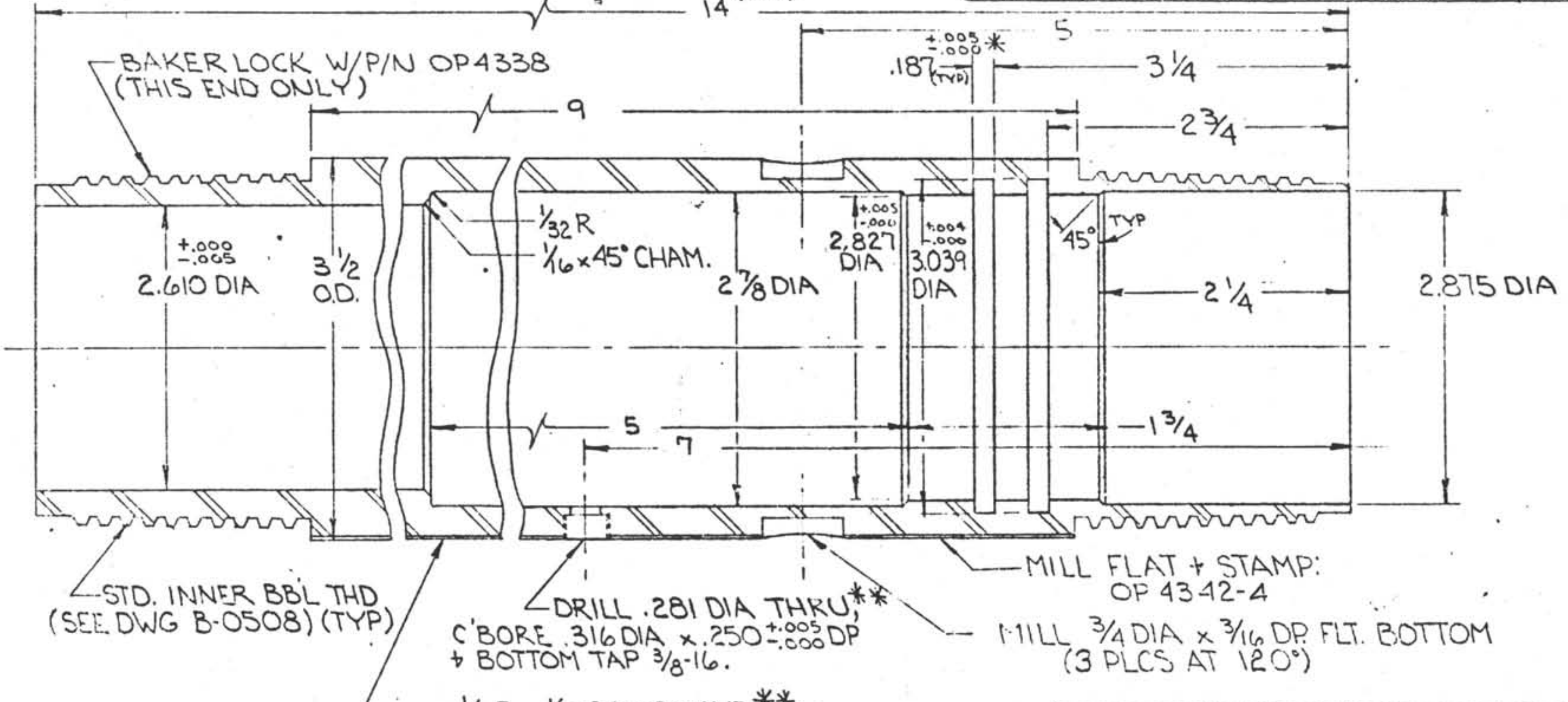

*O-RING 2-232

**GROOVE + HOLE TO BE CUT IN ASS'Y W/ P/N's OP4338 (IN CENTER OF DOG GROOVE). BAKER-LOCK OP4342 TO OP4336 + OP4338.

CONCENTRICITY:
ALL DIAMETERS
TIR .003

NOTE:
BREAK ALL SHARP EDGES
RADIUS ALL INSIDE CORNERS

TOLERANCES UNLESS NOTED FRACTIONS ± 1/64 DECIMALS ± .005 ANGLES ± 1/2° CORNERS 1/64 x 45° or 1/64 R FINISH 125 ✓	DEEP SEA DRILLING PROJECT SCRIPPS INSTITUTION OF OCEANOGRAPHY UNIVERSITY OF CALIFORNIA, SAN DIEGO LA JOLLA, CALIFORNIA 92093 TITLE UPPER LINER SEAL SUB V.L.H.P.C.				
SURFACE TREATMENT PARKOLUBRITE	MATERIAL 4130 C.D. ST.	DRAWN BY RK	DATE [illegible]	CHECKED [illegible]	APPROVED [illegible]
HEAT TREATMENT ----------	PART NO. OP4342-4	SIZE DWG. NO. B-OP4342-			REV. 4

REVISIONS					
NO.	DESCRIPTION	DATE	BY	CH.	APR.
1	DWG NO. WAS B-WL-21	6·4·81	RK		

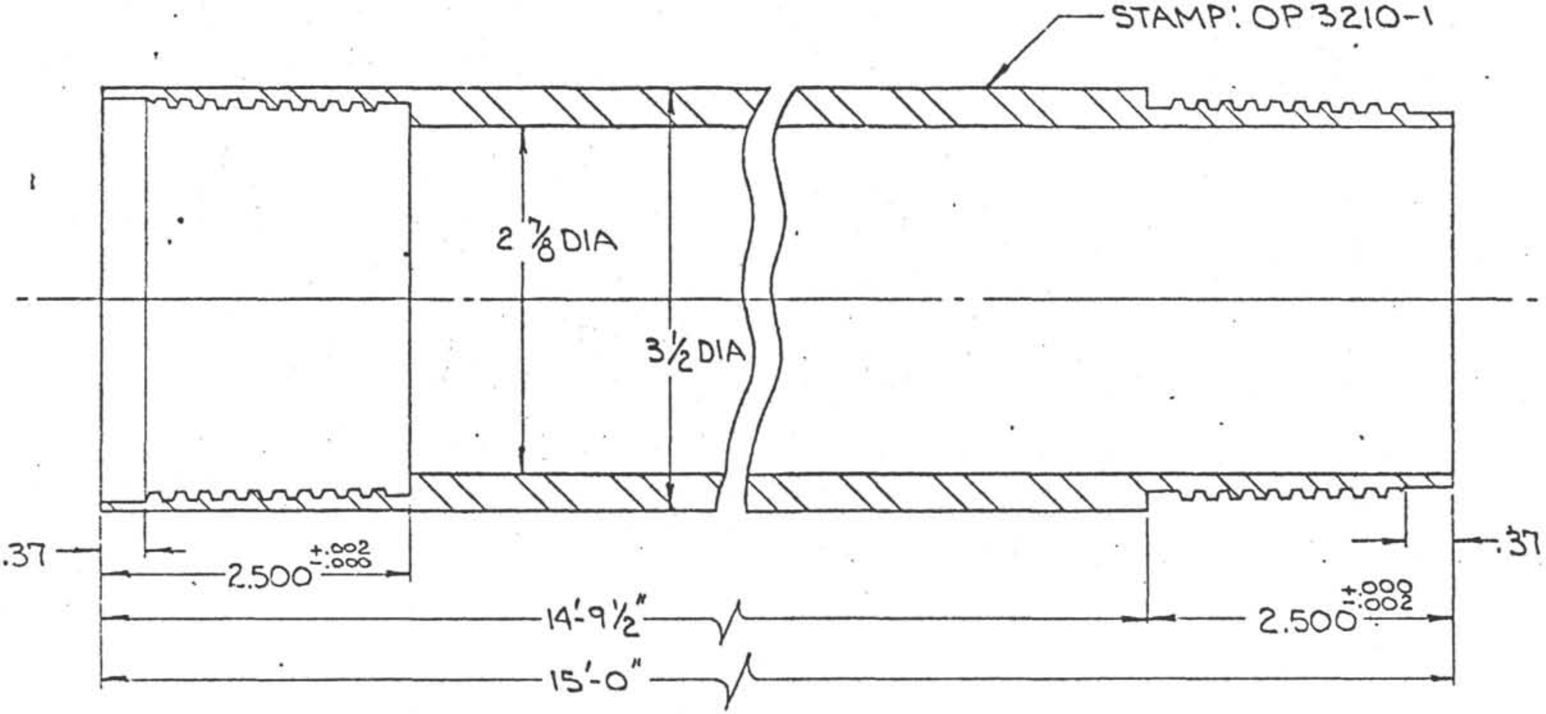

DSDP INNER BARREL THDS
SEE DWG No. B-0508

TOLERANCES UNLESS NOTED FRACTIONS ± 1/64 DECIMALS ± .005 ANGLES ± 1/2° CORNERS 1/64 x 45° or 1/64 R FINISH 125 ✓	DEEP SEA DRILLING PROJECT SCRIPPS INSTITUTION OF OCEANOGRAPHY UNIVERSITY OF CALIFORNIA, SAN DIEGO LA JOLLA, CALIFORNIA 92093 TITLE 14'-9 1/2" INNER CORE BB'L				
SURFACE TREATMENT	MATERIAL 4130 C.D.	DRAWN BY RK	DATE 6·4·81	CHECKED	APPROVED
HEAT TREATMENT	PART NO. OP 3210	SIZE DWG. NO. B - 1749 -			REV. 1

REVISIONS					
NO.	DESCRIPTION	DATE	BY	CH.	APR.

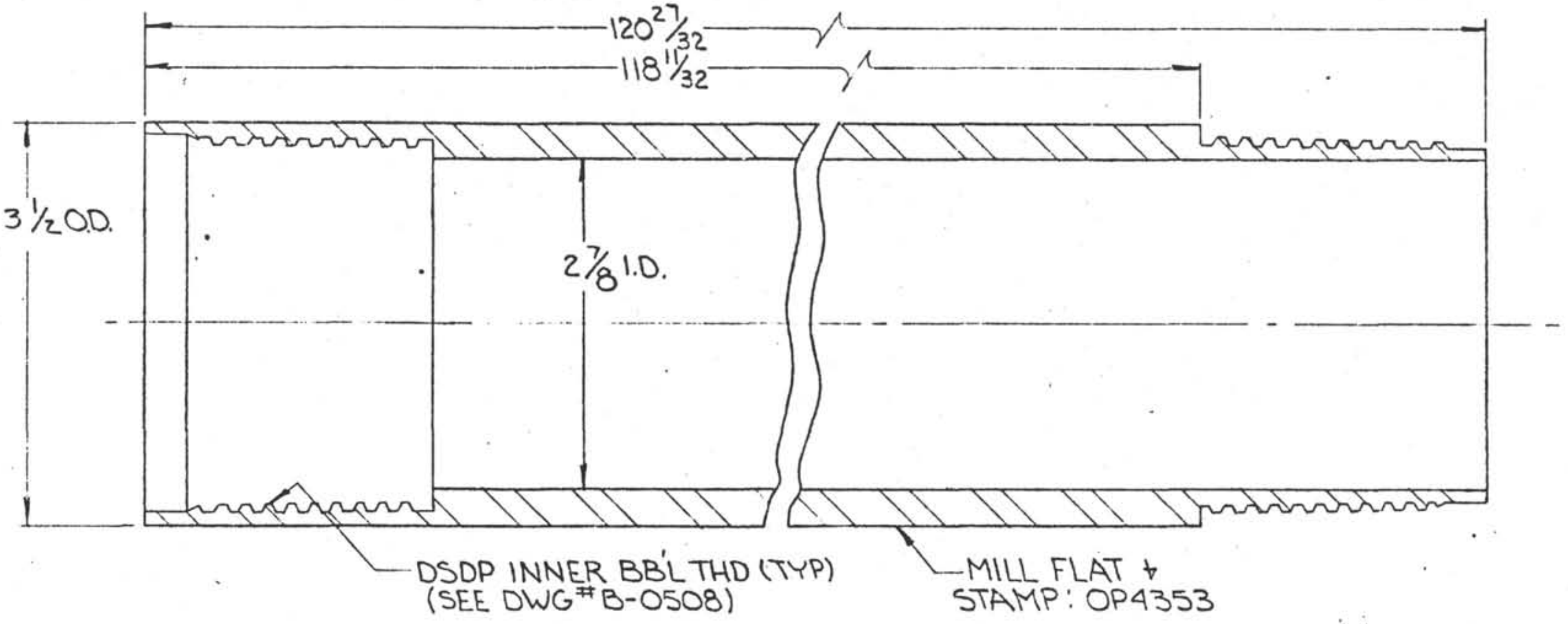

NO. REQ'D.
3.5m = 5
5.0m = 3
6.5m = 4
8.0m = 2
9.5m = 0

NOTE:
BREAK ALL SHARP EDGES
RADIUS ALL INSIDE CORNERS

DO NOT SCALE

CONCENTRICITY ALL DIAMETERS: TIR .003

TOLERANCES
UNLESS NOTED
FRACTIONS ± 1/64
DECIMALS ± .005
ANGLES ± 1/2°
CORNERS 1/64 x 45°
or 1/64 R
FINISH 125

DEEP SEA DRILLING PROJECT
SCRIPPS INSTITUTION OF OCEANOGRAPHY
UNIVERSITY OF CALIFORNIA, SAN DIEGO
LA JOLLA, CALIFORNIA 92093

TITLE
3m INNER BB'L
~VLHPC~

SURFACE TREATMENT	MATERIAL		DATE	BY	CHECKED	APPROVED
PARKOLUBRITE	4130 C.D.		10-31-80	RK	[illegible]	[illegible]
HEAT TREATMENT	SCALE	REQ'D/ASSY	PART NO.		DWG NO.	REV
	1:	SEE DWG	OP4353 -		B-OP4353	0

REVISIONS

NO.	DESCRIPTION	DATE	BY	CH.	APR.
1	O-RING# 2-232 WAS 2.335 (1 PLC)	12-12-31	RK	[illegible]	[illegible]

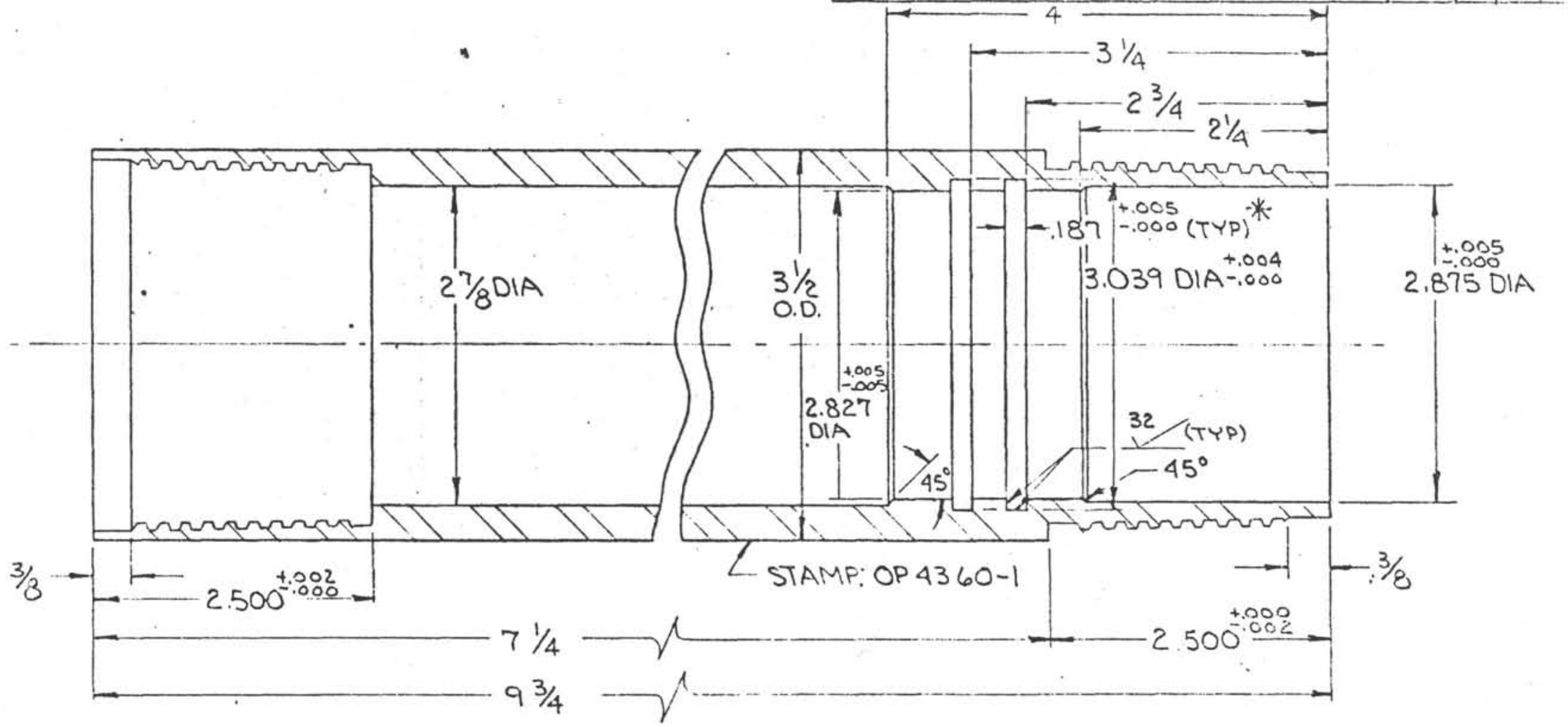

* FOR O-RING # 2-232
** DSDP INNER BBL THDS
SEE DWG B-0508

DO NOT SCALE

CONCENTRICITY ALL DIAMETERS: TIR .003

TOLERANCES UNLESS NOTED
FRACTIONS ± 1/64
DECIMALS ± .005
ANGLES ± 1/2°
CORNERS 1/64 x 45° or 1/64 R
FINISH 125 ✓

DEEP SEA DRILLING PROJECT
SCRIPPS INSTITUTION OF OCEANOGRAPHY
UNIVERSITY OF CALIFORNIA, SAN DIEGO
LA JOLLA, CALIFORNIA 97093

TITLE
LOWER LINER SEAL SUB
VL HPC

SURFACE TREATMENT	MATERIAL		DATE	BY	CHECKED	APPROVED
PA[illegible]	4130 C.D.		11-2-80	RK	[illegible]	[illegible]
HEAT TREATMENT	SCALE	REQ'D/ASS'Y	PART NO.		DWG. NO.	REV.
	1:1	1	OP4360-1		B-OP4360-1	

No.	DESCRIPTION	DATE	BY	APR.
1	H.P.C. NOTE ADDED, 3/4 WAS 2.76	11·27·78	RK	
2	DELETE H.P.C. NOTE	11·11·80	RK	

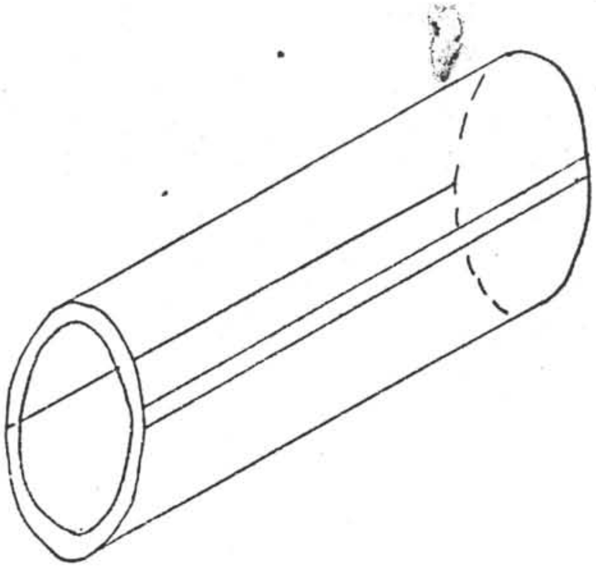

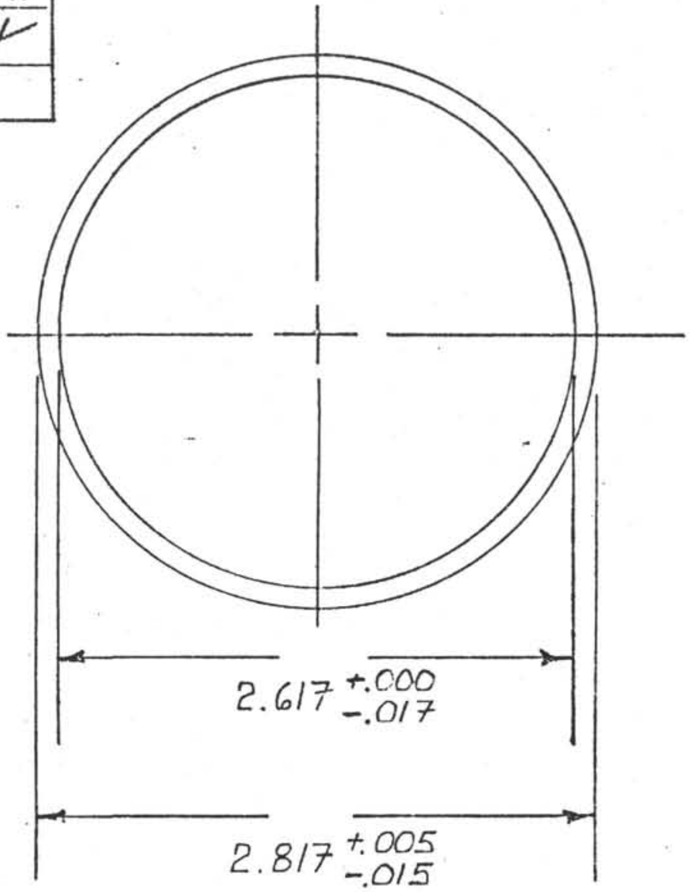

MATERIAL: CLEAR BUTYRATE PLASTIC

NOTE: COLOR LINER ON QTR.
ONE DOUBLE - THREE SINGLE
1/16" WIDE LINES
- NO PROTUBERANCE AT
CORE LINER SURFACE -

MINIMUM WALL: 0.092"
CONCENTRICITY WITHIN .050"

DSDP STANDARD CORE LINER

SCALE: NONE
DATE: 15 OCT. 74
APPROVED BY: 10/4
DRAWN BY
REVISED
SKETCH No. 1
PART No. OF 3400-2
FOR USE IN 3 1/2" INNER C'BBL.
DRAWING NUMBER A-0230-02

REVISIONS

NO.	DESCRIPTION	DATE	BY	CH.	APR.
1	1 WAS 2	4·16·81	RK		

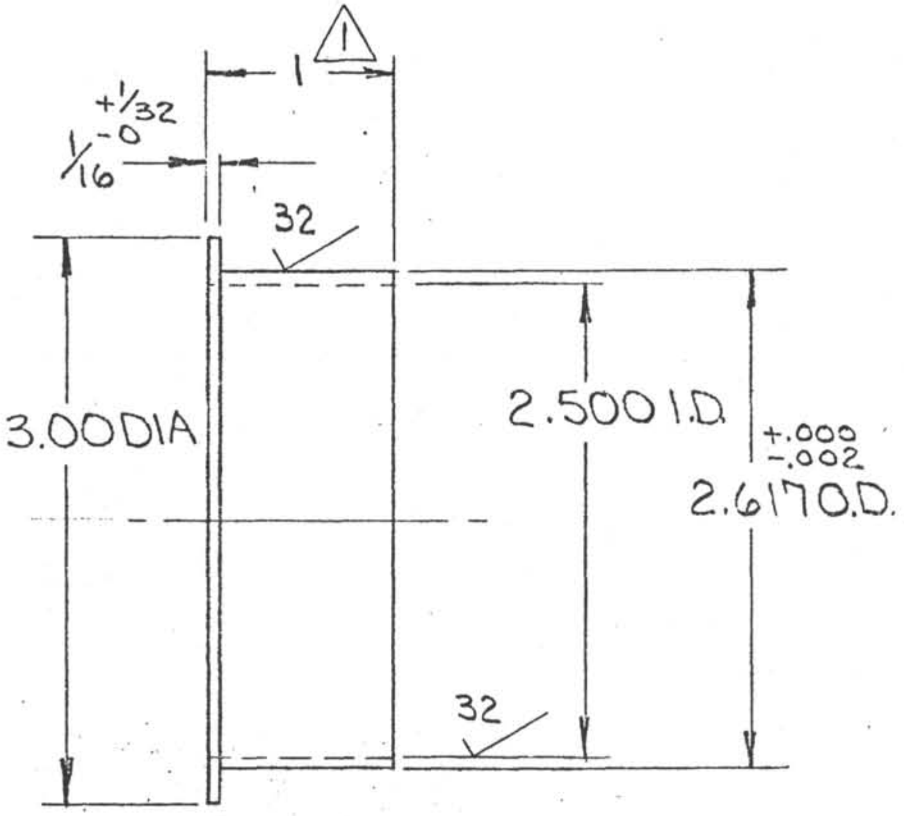

MAT'L:
SHELBY C.R.S. TUBING 3.000 O.D. ×
.250 WALL

DO NOT SCALE

CONCENTRICITY ALL DIAMETERS: TIR .003

TOLERANCES
UNLESS NOTED
FRACTIONS ± 1/64
DECIMALS ± .005
ANGLES ± 1/2°
CORNERS 1/64 x 45°
or 1/64 R
FINISH 125

DEEP SEA DRILLING PROJECT
SCRIPPS INSTITUTION OF OCEANOGRAPHY
UNIVERSITY OF CALIFORNIA, SAN DIEGO
LA JOLLA, CALIFORNIA 92093

TITLE PLASTIC TUBE SUPPORT
~VLHPC~

SURFACE TREATMENT

MATERIAL	DATE	BY	CHECKED	APPROVED
SEE ABOVE	11·21·80	RK		

HEAT TREATMENT

SCALE	REQ'D/ASS'Y	PART NO.	DWG. NO.	(REV.)
1:1	1	OP4382-1	A-OP4382 - 1	

REVISIONS					
NO.	DESCRIPTION	DATE	BY	CH.	APR.
1	ADDED 2 15/32	10-15-81	RK	[illegible]	[illegible]

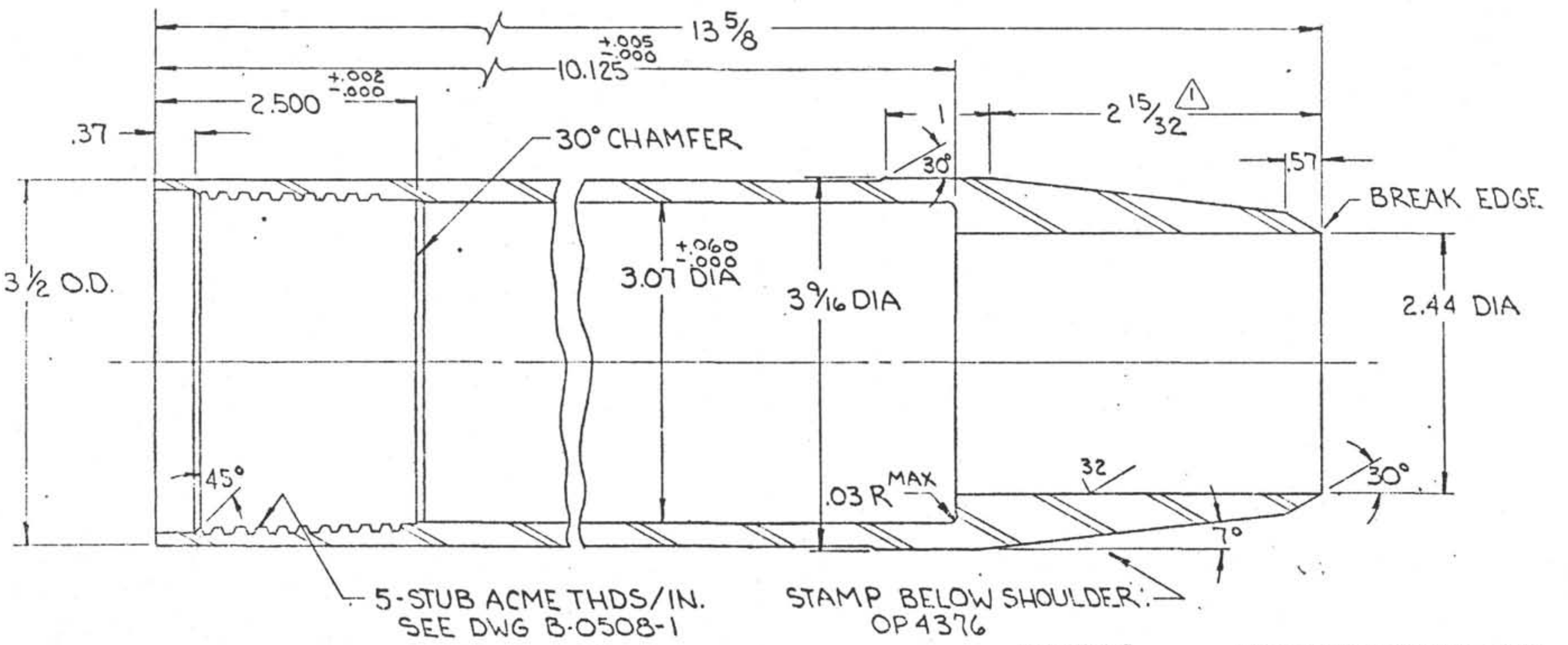

HEAT TREAT 38-40 Rc
YIELD 167,000 PSI
IZOD 38 FT LBS

NOTE:
BREAK ALL [illegible] ES
RADIUS [illegible] RS

DO NOT SCALE

CONCENTRICITY ALL DIAMETERS: TIR .003

TOLERANCES UNLESS NOTED FRACTIONS ± 1/64 DECIMALS ± .005 ANGLES ± 1/2° CORNERS 1/64 x 45° or 1/64 R FINISH 125	DEEP SEA DRILLING PROJECT SCRIPPS INSTITUTION OF OCEANOGRAPHY UNIVERSITY OF CALIFORNIA, SAN DIEGO LA JOLLA, CALIFORNIA 92093				
	TITLE CATCHER SUB ~VLHPC~				
SURFACE TREATMENT PARKOLUBE	MATERIAL 4140 STEEL	DATE 11-2-80	BY RK	CHECKED [illegible]	APPROVED [illegible]
HEAT TREATMENT SEE ABOVE	SCALE 1:1	REQ'D/ASS'Y 1	PART NO. OP4376 - 0	DWG. NO. B-OP4376 - 1	REV.

REVISIONS

NO.	DESCRIPTION	DATE	BY	CH.	APR.

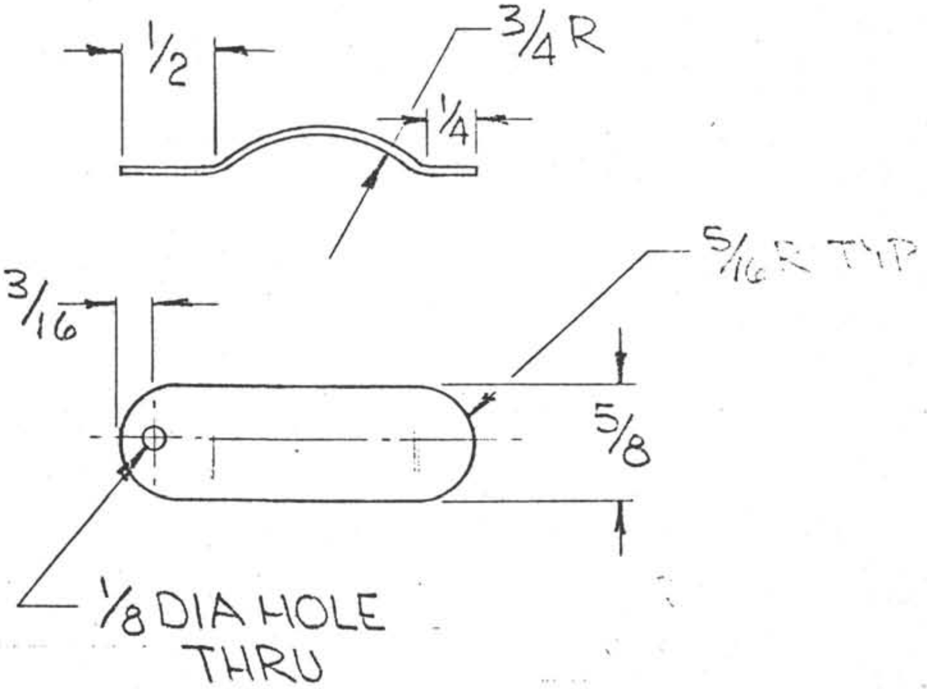

TOLERANCES UNLESS NOTED FRACTIONS ± 1/64 DECIMALS ± .005 ANGLES ± 1/2° CORNERS 1/64 x 45° or 1/64 R FINISH 125	DEEP SEA DRILLING PROJECT SCRIPPS INSTITUTION OF OCEANOGRAPHY UNIVERSITY OF CALIFORNIA, SAN DIEGO LA JOLLA, CALIFORNIA 92093 TITLE SPRING, FLAPPER C'CATCHER ~H·P.C 15'~

SURFACE TREATMENT	MATERIAL	DRAWN BY	DATE	CHECKED	APPROVED
—⊖—	.05 BERYLLIUM	KK	12·79		

HEAT TREATMENT	PART NO.	SIZE DWG. NO.	REV.
—⊖—	OP 4107	A-1290-	00

REVISIONS					
NO.	DESCRIPTION	DATE	BY	CH.	APR.
1	7/8 WAS 37/64, 1/4 WAS 7/16, TAPER PIN ADD.	11·9·77	K.K.		
2	1/2 WAS 3/8, 1/4 R WAS WELD, MAT'L WAS SHELBY	9·5·80	[illegible]	[illegible]	[illegible]

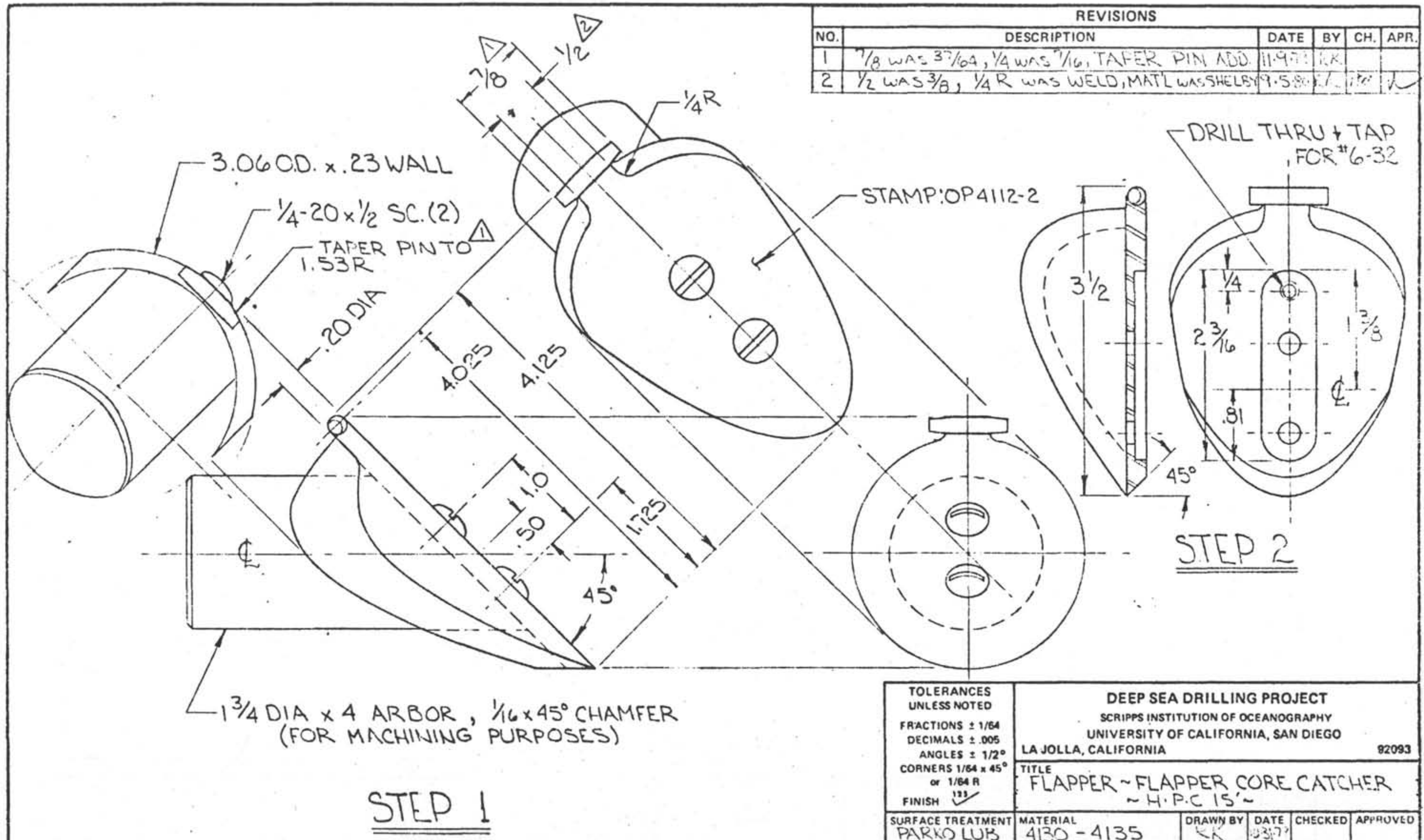

TOLERANCES UNLESS NOTED FRACTIONS ± 1/64 DECIMALS ± .005 ANGLES ± 1/2° CORNERS 1/64 x 45° or 1/64 R FINISH 125 ✓	DEEP SEA DRILLING PROJECT SCRIPPS INSTITUTION OF OCEANOGRAPHY UNIVERSITY OF CALIFORNIA, SAN DIEGO LA JOLLA, CALIFORNIA 92093				
	TITLE FLAPPER ~ FLAPPER CORE CATCHER ~ H·P·C 15' ~				
SURFACE TREATMENT PARKO LUB	MATERIAL 4130 - 4135	DRAWN BY KK	DATE 3·17·77	CHECKED	APPROVED
HEAT TREATMENT 36 Rc	PART NO. OP4112-02	SIZE DWG. NO. B-1246 -			REV. 2

REVISIONS					
NO.	DESCRIPTION	DATE	BY	CH.	APR.
1	5.0 WAS 4¾, 4.525 WAS 4.275, 5/8 WAS 3/8 SLOT DELETED	11·9·79	RK		
2	9/16 WAS .38 ADD 1/4 R	9·5·80	RK	PGF	

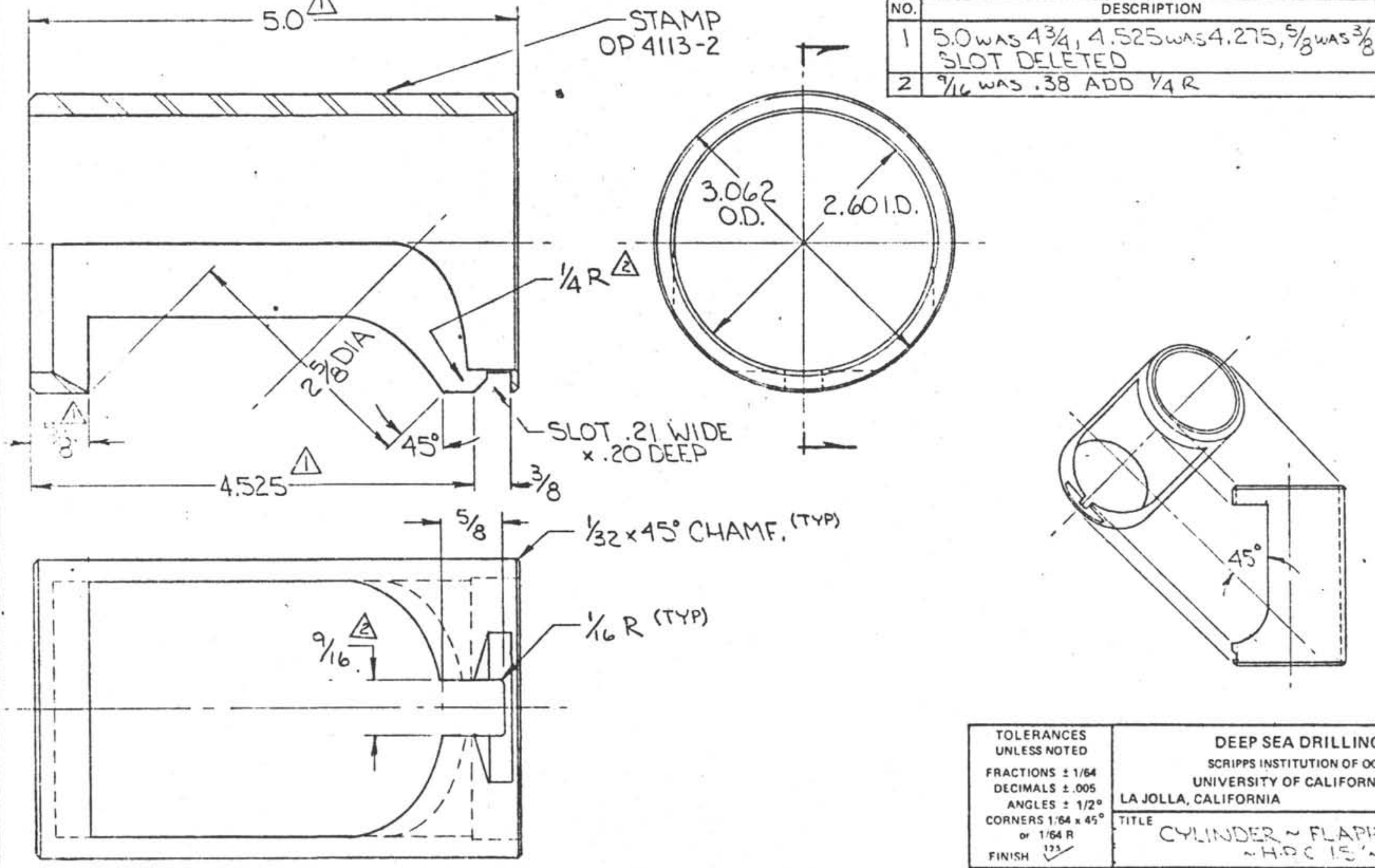

TOLERANCES UNLESS NOTED FRACTIONS ± 1/64 DECIMALS ± .005 ANGLES ± 1/2° CORNERS 1/64 x 45° or 1/64 R FINISH 125 ✓	DEEP SEA DRILLING PROJECT SCRIPPS INSTITUTION OF OCEANOGRAPHY UNIVERSITY OF CALIFORNIA, SAN DIEGO LA JOLLA, CALIFORNIA 92093				
	TITLE CYLINDER ~ FLAPPER CORE CATCHER ~H.P.C 15'~				
SURFACE TREATMENT [illegible]	MATERIAL SHELBY TUBING	DRAWN BY RK	DATE [illegible]	CHECKED	APPROVED
HEAT TREATMENT —⊖—	PART NO. OP 4113-2	SIZE B	DWG. NO. 1297 -		REV. [illegible]

REVISIONS					
NO.	DESCRIPTION	DATE	BY	CH.	APR.
3	REDRAWN	2.3.81	RK	PCM	UBR

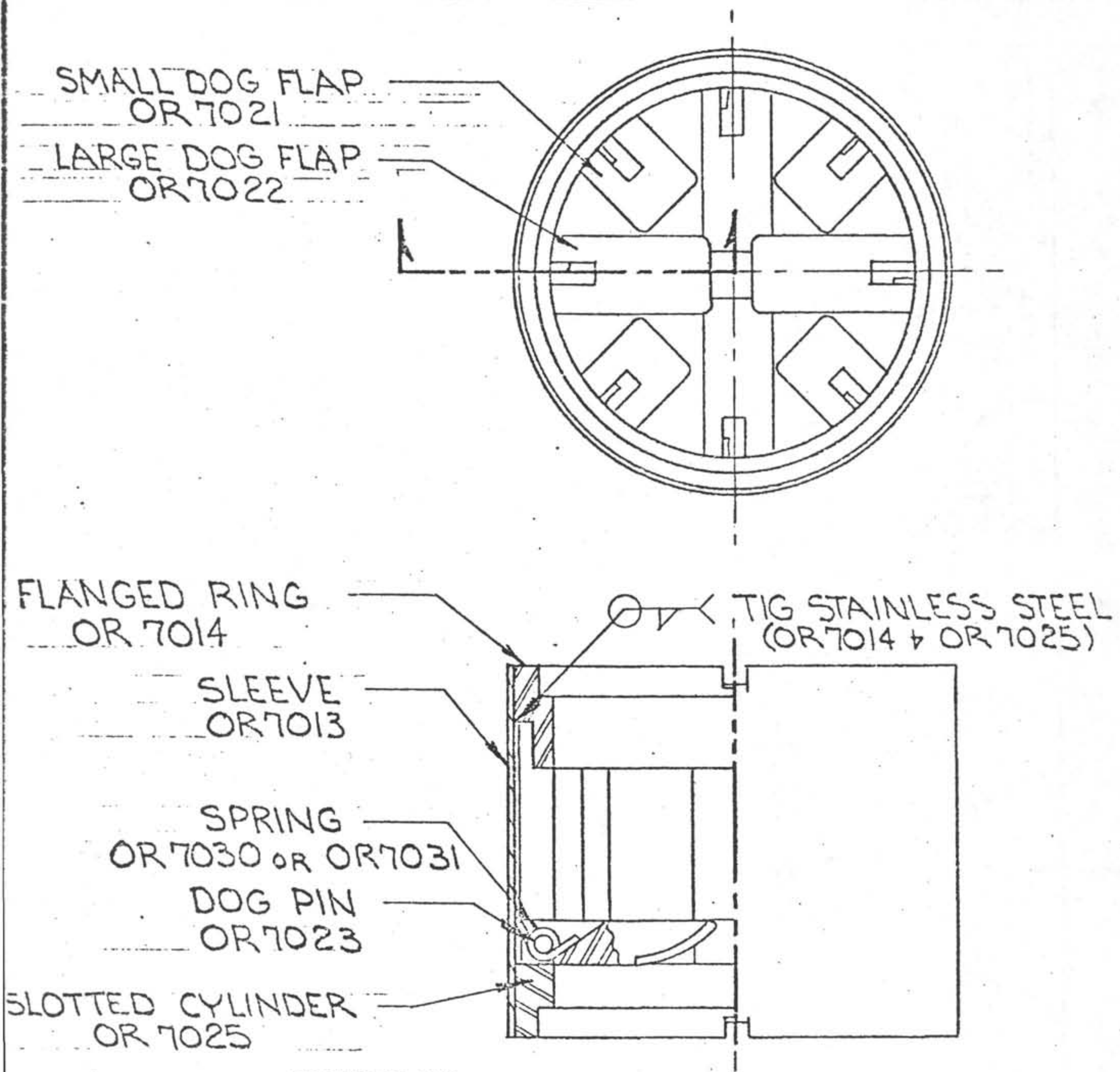

DO NOT SCALE

CONCENTRICITY ALL DIAMETERS: TIR .003

TOLERANCES
UNLESS NOTED
FRACTIONS ± 1/64
DECIMALS ± .005
ANGLES ± 1/2°
CORNERS 1/64 x 45°
or 1/64 R
FINISH 125 ✓

DEEP SEA DRILLING PROJECT
SCRIPPS INSTITUTION OF OCEANOGRAPHY
UNIVERSITY OF CALIFORNIA, SAN DIEGO
LA JOLLA, CALIFORNIA 92093

TITLE
CORE CATCHER ASS'Y
~3 1/16 x 2 1/2 HARD + SOFT FORMATION~

SURFACE TREATMENT —0—
MATERIAL —0—
DATE 2.3.81
BY RK
CHECKED PCM
APPROVED
HEAT TREATMENT —0—
SCALE 1:1
REQ'D/ASS'Y —0—
PART NO. OR7020-3
DWG. NO. A-0191 (REV.) -3

REVISIONS					
NO.	DESCRIPTION	DATE	BY	CH.	APR.
1	REVISED (PRE-RELEASE)	1·30·81	RK		
2	ADD 30° CHAM., O.D. WAS 2⅛	2·6·81	RK		
3	1 5/16 WAS 9/16, 2¾ WAS 2, ADD ⅜-16 THD	2·26·81	RK		
4	REMOVED THDS ONE END AS SHOWN	3·13·81	RK	KT	
5	ADDED GUNDRILL NOTE	1·5·82	RK		
6	1¾-4 THD WAS 1⅝-8	1·10·83	RK		

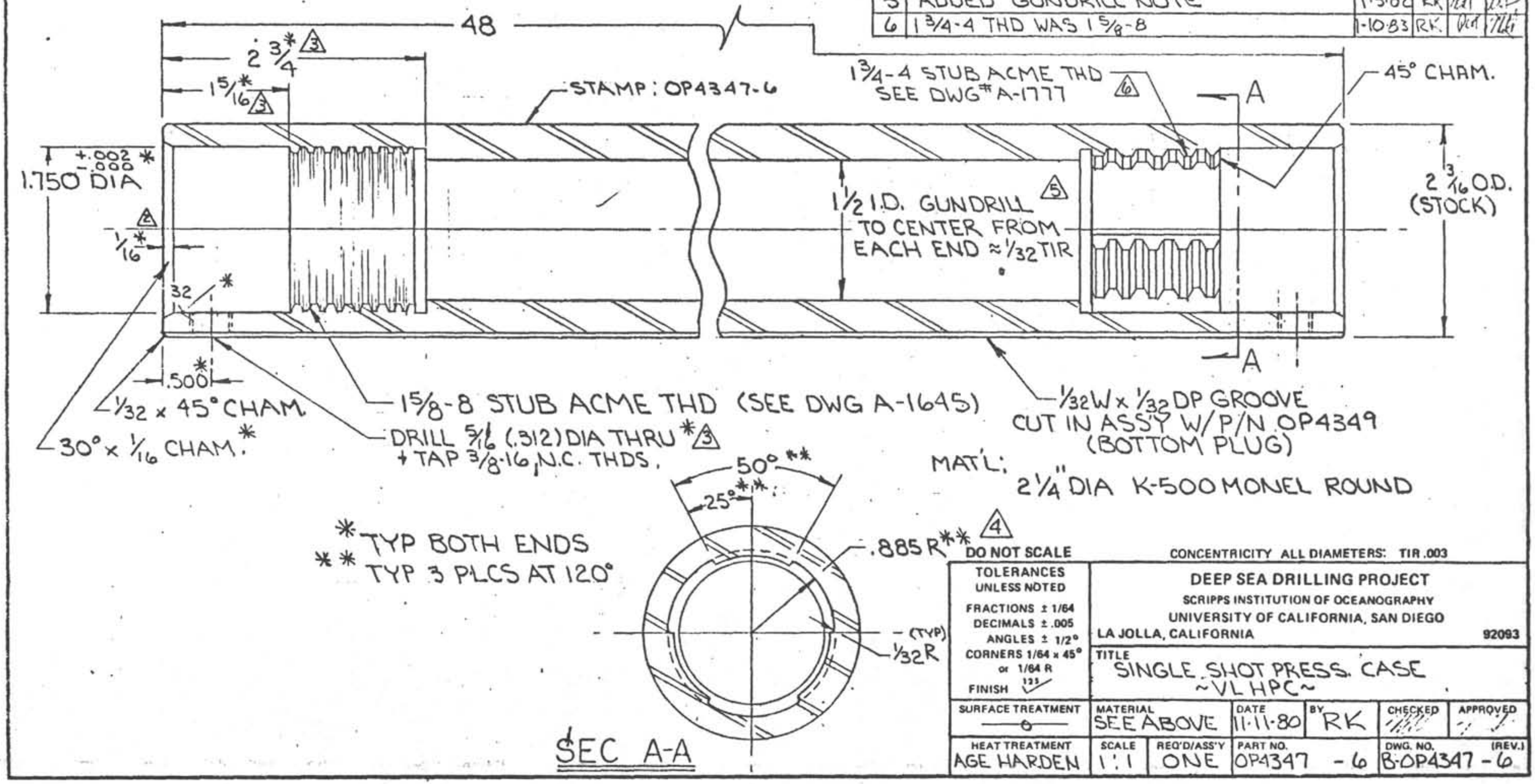

MAT'L:
2¼" DIA K-500 MONEL ROUND

* TYP BOTH ENDS
** TYP 3 PLCS AT 120°

DO NOT SCALE

CONCENTRICITY ALL DIAMETERS: TIR .003

TOLERANCES UNLESS NOTED FRACTIONS ± 1/64 DECIMALS ± .005 ANGLES ± 1/2° CORNERS 1/64 × 45° or 1/64 R FINISH 125 ✓	DEEP SEA DRILLING PROJECT SCRIPPS INSTITUTION OF OCEANOGRAPHY UNIVERSITY OF CALIFORNIA, SAN DIEGO LA JOLLA, CALIFORNIA 92093 TITLE SINGLE SHOT PRESS. CASE ~VL HPC~					
SURFACE TREATMENT —o—	MATERIAL SEE ABOVE		DATE 11·11·80	BY RK	CHECKED	APPROVED
HEAT TREATMENT AGE HARDEN	SCALE 1:1	REQ'D/ASS'Y ONE	PART NO. OP4347 -6		DWG. NO. (REV.) B-OP4347 -6	

REVISIONS					
NO.	DESCRIPTION	DATE	BY	CH.	APR.
1	REVISED (PRE RELEASE)	1-30-81	RK	[illegible]	[illegible]
2	.100 WAS .190, .281/.190, OD/2⅛, 1.404/1.380	2-6-81	RK	[illegible]	[illegible]
3	3¼ WAS 4, .850 WAS .100, ADD 1.400 × .380	2-25-81	RK	[illegible]	[illegible]
4	.815 WAS .850, .311/.316 WAS $.281^{+.005}_{-.000}$	4-17-81	RK	[illegible]	[illegible]

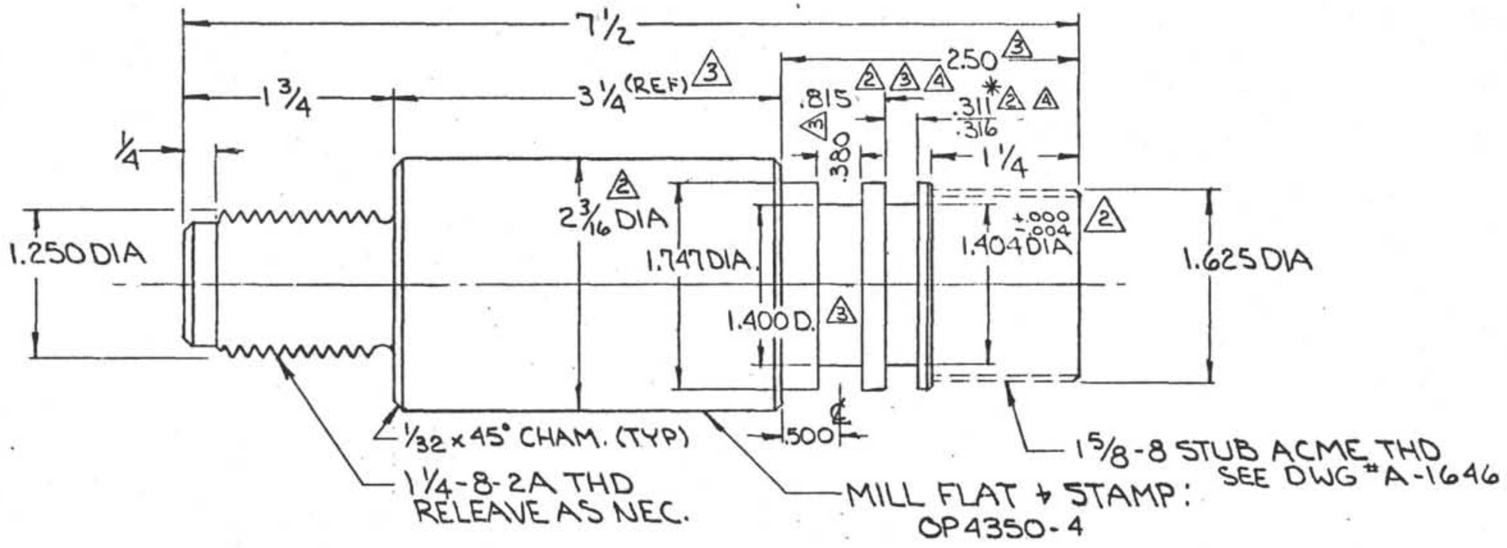

* FOR O-RING # 2-324
AND PARBAK 8-324

DO NOT SCALE CONCENTRICITY ALL DIAMETERS: TIR .003

TOLERANCES UNLESS NOTED FRACTIONS ± 1/64 DECIMALS ± .005 ANGLES ± 1/2° CORNERS 1/64 × 45° or 1/64 R FINISH 125 ✓	DEEP SEA DRILLING PROJECT SCRIPPS INSTITUTION OF OCEANOGRAPHY UNIVERSITY OF CALIFORNIA, SAN DIEGO LA JOLLA, CALIFORNIA 92093				
	TITLE SINGLE SHOT TOP PLUG VLHPC				
SURFACE TREATMENT —⊖—	MATERIAL K-500 MONEL	DATE 1-12-81	BY RK	CHECKED [illegible]	APPROVED [illegible]
HEAT TREATMENT —⊖—	SCALE 1:1	REQ'D/ASS'Y 1	PART NO. OP4350 -4	DWG. NO. (REV.) B-OP4350-4	

REVISIONS					
NO.	DESCRIPTION	DATE	BY	CH.	APR.
1	REVISED (PRE-RELEASE)	1·30·81	RK		
2	.281 WAS .190, .100/.190, 1.404/1.380, OD/1⅛ ADD ⅜-18 NPT	2·6·81	RK		
3	⅞ WAS .100, 2.50 WAS 1.75, ADD 1.400 x .380	2·25·81	RK		
4	ADD ORIENTATION LINE	3·5·81	RK		
5	THD SEGMENTS AT 120°, 25/64 D. WAS .380 GROOVE	3·13·81	RK	KT	
6	.311/.316 WAS .281, 27/32 WAS ¾	4·17·81	RK		
7	ADDED FLATS	5·19·81	RK		
8	19/32 WAS 37/64	10·16·81	RK		
9	1¾-4 THD WAS 1⅝-8	1-11-83	RK		

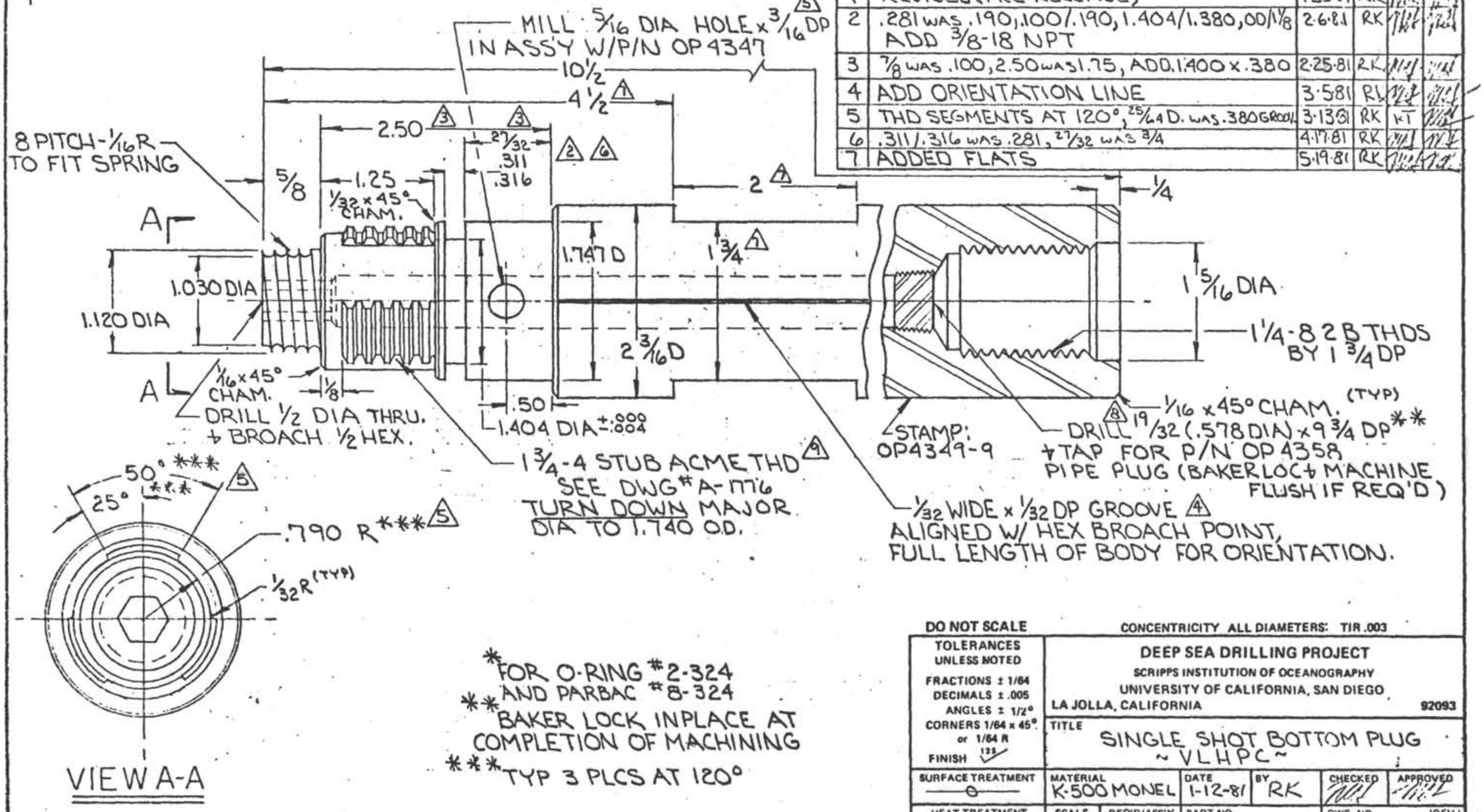

*FOR O-RING #2-324 AND PARBAC #8-324

**BAKER LOCK INPLACE AT COMPLETION OF MACHINING

***TYP 3 PLCS AT 120°

DO NOT SCALE

CONCENTRICITY ALL DIAMETERS: TIR .003

TOLERANCES UNLESS NOTED FRACTIONS ± 1/64 DECIMALS ± .005 ANGLES ± 1/2° CORNERS 1/64 x 45° or 1/64 R FINISH 125	**DEEP SEA DRILLING PROJECT** SCRIPPS INSTITUTION OF OCEANOGRAPHY UNIVERSITY OF CALIFORNIA, SAN DIEGO LA JOLLA, CALIFORNIA 92093				
	TITLE SINGLE SHOT BOTTOM PLUG ~VLHPC~				
SURFACE TREATMENT —⊖—	MATERIAL K-500 MONEL	DATE 1-12-81	BY RK	CHECKED	APPROVED
HEAT TREATMENT AGE HARDEN	SCALE 1:1	REQ'D/ASS'Y 1	PART NO. OP4349 -9	DWG. NO. B-OP4349-9	(REV.)

REVISIONS					
NO.	DESCRIPTION	DATE	BY	CH.	APR.

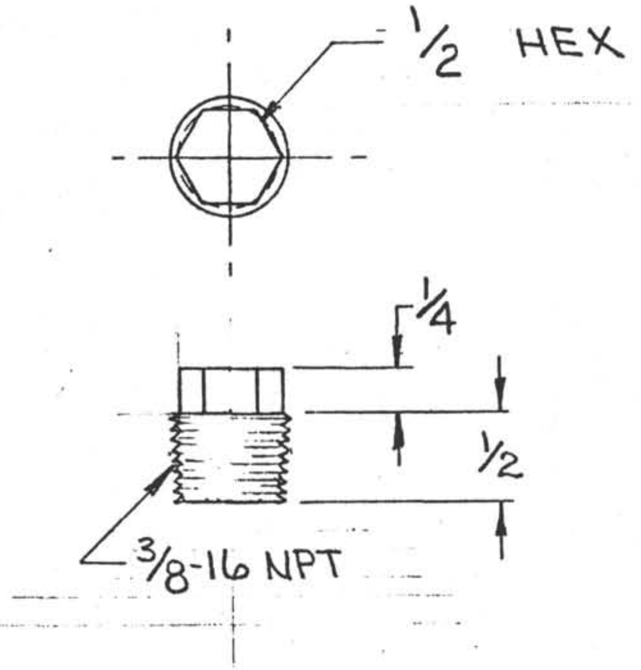

NOTE:
AFTER INSTALLATION TOP OF PLUG MAY REQUIRE MACHINING TO AVOID INTERFERENCE WITH P/N NO. OP4350.
BAKER LOC IN PLACE.

DO NOT SCALE

CONCENTRICITY ALL DIAMETERS: TIR .003

TOLERANCES UNLESS NOTED
FRACTIONS ± 1/64
DECIMALS ± .005
ANGLES ± 1/2°
CORNERS 1/64 x 45° or 1/64 R
FINISH 125✓

DEEP SEA DRILLING PROJECT
SCRIPPS INSTITUTION OF OCEANOGRAPHY
UNIVERSITY OF CALIFORNIA, SAN DIEGO
LA JOLLA, CALIFORNIA 92093

TITLE
PIPE PLUG - SINGLE SHOT BOTTOM PLUG ~ VL-HPC ~

SURFACE TREATMENT -0-	MATERIAL NITRONIC 60	DATE 11·11·81	BY RK	CHECKED WZL	APPROVED WZL
HEAT TREATMENT -0-	SCALE 1:1	REQ'D/ASS'Y 1	PART NO. OP4358	DWG. NO. A-OP4358	(REV.) 0

REVISIONS					
NO.	DESCRIPTION	DATE	BY	CH.	APR.
1	5' WAS 5'-1 3/4", 2 3/16 WAS 2 1/8	2·24·81	RK		
2	4'-8" WAS 5'	6·29·82	RK		

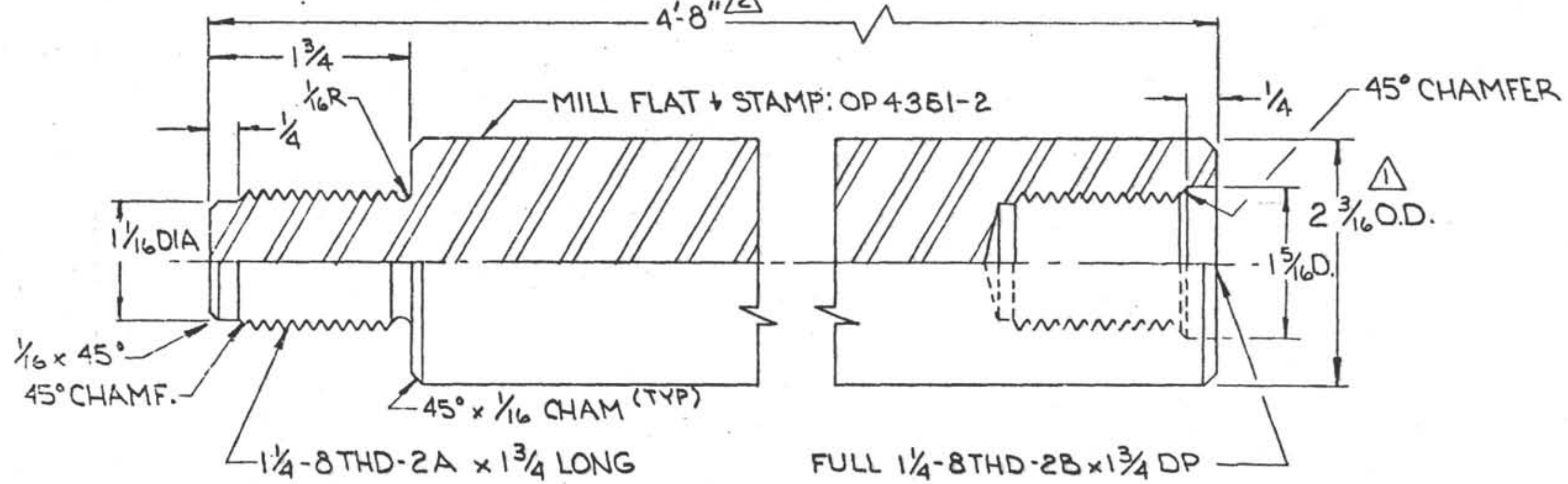

NOTE:
COLD DRAWN AGE HARDENED

DO NOT SCALE

CONCENTRICITY ALL DIAMETERS: TIR .003

TOLERANCES UNLESS NOTED FRACTIONS ± 1/64 DECIMALS ± .005 ANGLES ± 1/2° CORNERS 1/64 × 45° or 1/64 R FINISH 125 ✓	DEEP SEA DRILLING PROJECT SCRIPPS INSTITUTION OF OCEANOGRAPHY UNIVERSITY OF CALIFORNIA, SAN DIEGO LA JOLLA, CALIFORNIA 92093				
	TITLE NON-MAGNETIC SINKER BAR ~ORIENTED VLHPC~				
SURFACE TREATMENT —○—	MATERIAL K-500 MONEL	DATE 2·4·81	BY RK	CHECKED	APPROVED
HEAT TREATMENT SEE NOTE	SCALE 1:1	REQ'D/ASS'Y 2	PART NO. OP4351 - 2	DWG. NO. (REV.) B-OP4351-2	

REVISIONS

NO.	DESCRIPTION	DATE	BY	CH.	APR.

½-13 x ¾ SOCKET SET SCREW

MAT'L: — ALLOY STEEL
FEATURES:- NYLOC, CUP POINT
FINISH: — CAD. PLATE

USED ON: TOP SUB CAP - OP 4300
QUICK RELEASE SLEEVE - OP 4337

DO NOT SCALE

CONCENTRICITY ALL DIAMETERS: TIR .003

TOLERANCES
UNLESS NOTED
FRACTIONS ± 1/64
DECIMALS ± .005
ANGLES ± 1/2°
CORNERS 1/64 x 45°
or 1/64 R
FINISH 125 ✓

DEEP SEA DRILLING PROJECT
SCRIPPS INSTITUTION OF OCEANOGRAPHY
UNIVERSITY OF CALIFORNIA, SAN DIEGO
LA JOLLA, CALIFORNIA 92093

TITLE ½-13 x ¾ SOC SET SCREW - TOP SUB CAP
~ VLHPC ~

SURFACE TREATMENT CAD. PLATE	MATERIAL ALLOY ST.		DATE 4-16-81	BY RK	CHECKED	APPROVED
HEAT TREATMENT —⊖—	SCALE —⊖—	REQ'D/ASS'Y 1	PART NO. OP4302		DWG. NO. (REV.) A-OP4302 - 0	

REVISIONS

NO.	DESCRIPTION	DATE	BY	CH.	APR.
1	RE-DRAWN	3·5·81	RK		
2	25/64 WAS 3/8 DIA	3·19·81	RK		
3	ADDED 45° CHAMFER	9·24·81	RK		

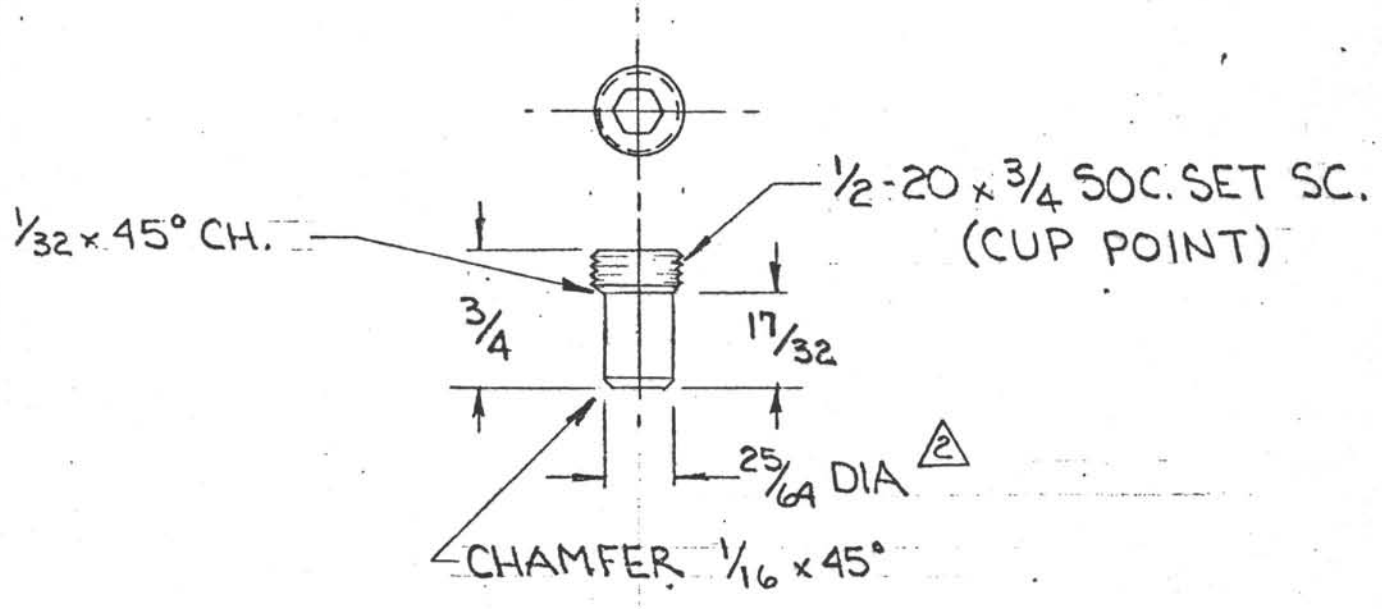

NOTE:

BAKER-LOC W/ PULLING
TOOL CYLINDER OT 3010

DO NOT SCALE CONCENTRICITY ALL DIAMETERS: TIR .003

TOLERANCES UNLESS NOTED FRACTIONS ± 1/64 DECIMALS ± .005 ANGLES ± 1/2° CORNERS 1/64 × 45° or 1/64 R FINISH 125	DEEP SEA DRILLING PROJECT SCRIPPS INSTITUTION OF OCEANOGRAPHY UNIVERSITY OF CALIFORNIA, SAN DIEGO LA JOLLA, CALIFORNIA 92093
	TITLE ALIGNMENT SCREW-OVERSHOT CYL. ~VLHPC~

SURFACE TREATMENT	MATERIAL	DATE	BY	CHECKED	APPROVED
	ALLOY STEEL	3-5-81	RK		

HEAT TREATMENT	SCALE	REQ'D/ASS'Y	PART NO.	DWG. NO.	(REV.)
	1:1	ONE	OP4301-3	A-OP4301	3

REVISIONS

NO.	DESCRIPTION	DATE	BY	CH.	APR.

5/8-11 x 3/4 SOCK SET SCREW

MAT'L: — ALLOY STEEL
FEATURES: — NYLOC, CUP POINT
FINISH: — CAD. PLATE

USED ON: OUTER SWIVEL BODY OP4367

DO NOT SCALE
CONCENTRICITY ALL DIAMETERS: TIR .003

TOLERANCES
UNLESS NOTED
FRACTIONS ± 1/64
DECIMALS ± .005
ANGLES ± 1/2°
CORNERS 1/64 x 45°
or 1/64 R
FINISH 125✓

DEEP SEA DRILLING PROJECT
SCRIPPS INSTITUTION OF OCEANOGRAPHY
UNIVERSITY OF CALIFORNIA, SAN DIEGO
LA JOLLA, CALIFORNIA 92093

TITLE 1/2-13 x 3/4 SOC SET SCREW-OUTER SWIVEL BODY ~VLHPC~

SURFACE TREATMENT	MATERIAL	DATE	BY	CHECKED	APPROVED
CAD. PLATE	ALLOY ST.	4.16.81	RK		

HEAT TREATMENT	SCALE	REQ'D/ASS'Y	PART NO.	DWG. NO.	(REV.)
—0—	-0-	1	OP4369-0	OP4369	-0

REVISIONS

NO.	DESCRIPTION	DATE	BY	CH.	APR.
1	.193 WAS .1985	7·12·82	RK		
2	WAS NYLOC SC. ADD. 3/16 BROACH, LOCK PATCH	1·24·83	RK		

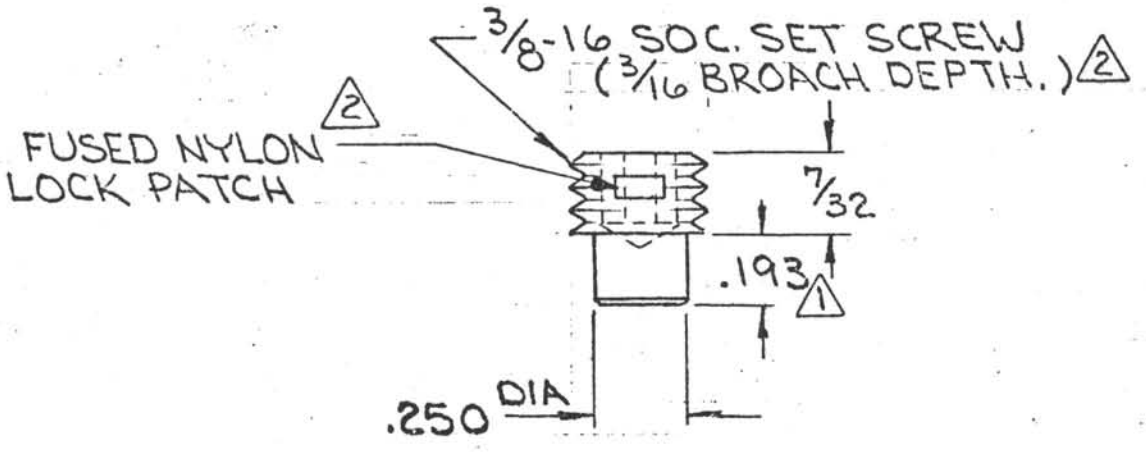

DO NOT SCALE

CONCENTRICITY ALL DIAMETERS: TIR .003

TOLERANCES
UNLESS NOTED
FRACTIONS ± 1/64
DECIMALS ± .005
ANGLES ± 1/2°
CORNERS 1/64 x 45°
or 1/64 R
FINISH 125

DEEP SEA DRILLING PROJECT
SCRIPPS INSTITUTION OF OCEANOGRAPHY
UNIVERSITY OF CALIFORNIA, SAN DIEGO
LA JOLLA, CALIFORNIA 92093

TITLE
UPPER LINER SEAL SUB RETAINER
SCREW ~ VLHPC

SURFACE TREATMENT	MATERIAL	DATE	BY	CHECKED	APPROVED
	ALLOY STEEL	3-12-81	RK		

HEAT TREATMENT	SCALE	REQ'D/ASS'Y	PART NO.	DWG. NO. (REV.)
	2:1	ONE	OP4361-2	A-OP4361-2

REVISIONS

NO.	DESCRIPTION	DATE	BY	CH.	APR.

3/8-16 x 3/8 SOCK SET SCREW

MAT'L: ALLOY STEEL
FEATURES: NYLOC, CUP POINT
FINISH: CAD. PLATE

USED ON: (VLHPC) BYPASS SUB OP4309
4.5m SHAFT LINK OP4320
INNER SEAL SUB OP4323
LOWER OUTER BODY OP4328
3.0m SHAFT LINK OP4354
LOWER SHAFT OP4355
OUTER BODY SEAL OP4362
SWIVEL RETAINER OP4366
SINGLE SHOT PRESS. CASE OP4347

DO NOT SCALE

CONCENTRICITY ALL DIAMETERS: TIR .003

TOLERANCES
UNLESS NOTED
FRACTIONS ± 1/64
DECIMALS ± .005
ANGLES ± 1/2°
CORNERS 1/64 x 45°
or 1/64 R
FINISH 125

DEEP SEA DRILLING PROJECT
SCRIPPS INSTITUTION OF OCEANOGRAPHY
UNIVERSITY OF CALIFORNIA, SAN DIEGO
LA JOLLA, CALIFORNIA 92093

TITLE 3/8-16 x 3/8 SOC SET SCREW – ~HPC + VLHPC~

SURFACE TREATMENT CAD. PLATE	MATERIAL ALLOY ST.		DATE 4-16-81	BY RK	CHECKED	APPROVED
HEAT TREATMENT —θ—	SCALE —θ—	REQ'D/ASS'Y —θ—	PART NO. OP4185-0		DWG. NO. A-1724-0	(REV.)

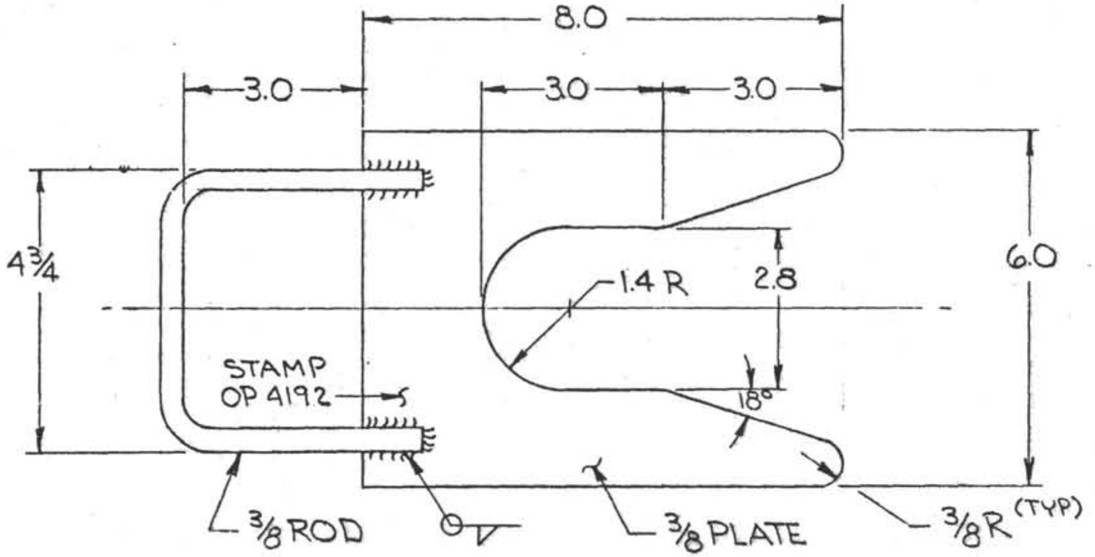

FINISH: PARKOLUBRITE

MAT'L:
COLD ROLLED STEEL

TOLERANCES
UNLESS OTHERWISE SPECIFIED
.X = ±.1
.XX = ±.01
.XXX = ±.001
ANGLES ±30'

NOTE:
BREAK ALL SHARP EDGES
RADIUS ALL INSIDE CORNERS

UNIV. OF CALIF
DEEP SEA DRILLING PROJ.

SCALE: HALF DATE: 11·27·78	APPROVED BY: 12/4	DRAWN BY RK REVISED

HANG OFF PLATE - H.P.C.-15

PART No. OP4192

DRAWING NUMBER B-0942-00

(WAS 25-0887-00)

REVISIONS

NO.	DESCRIPTION	DATE	BY	CH.	APR.

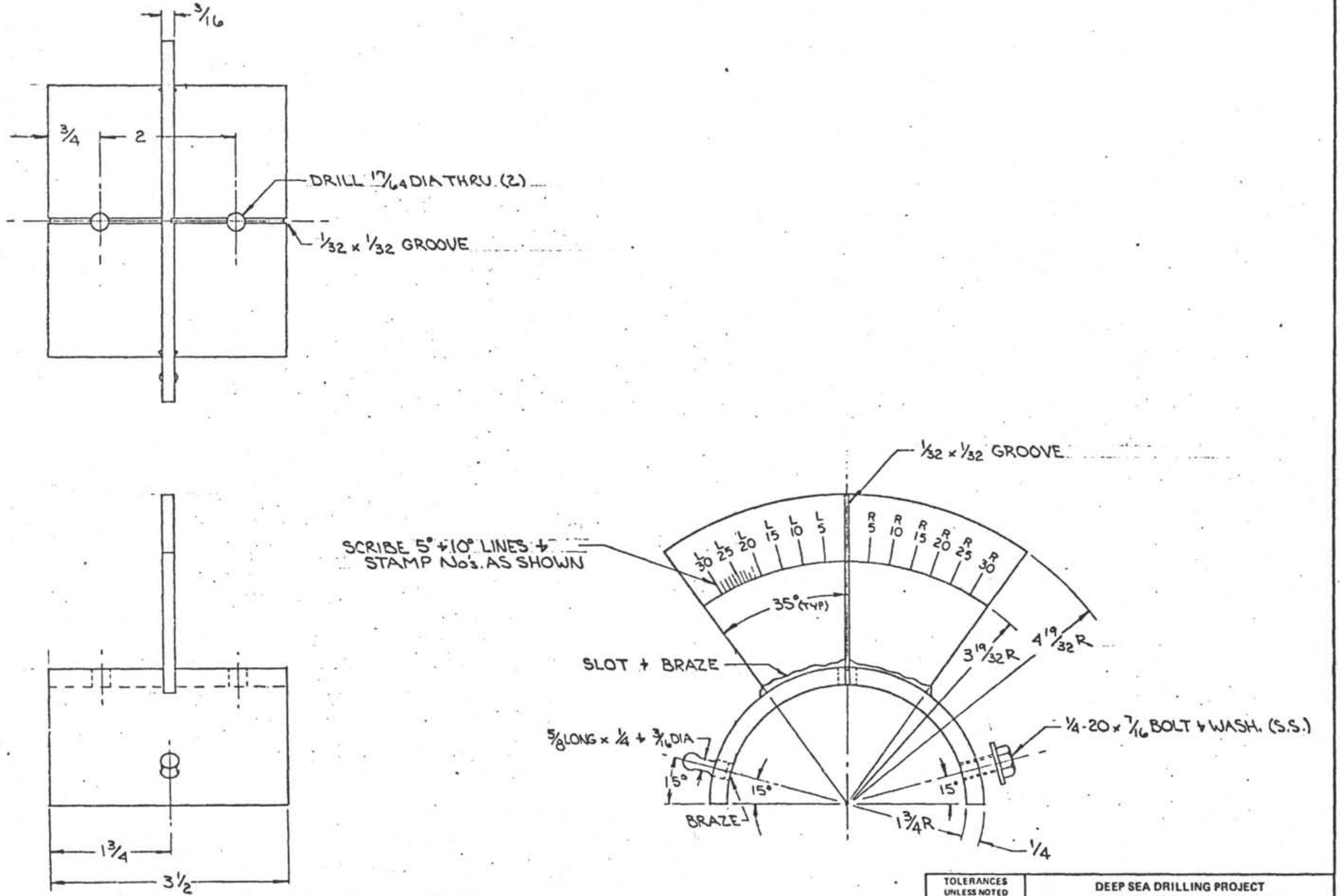

TOLERANCES UNLESS NOTED FRACTIONS ± 1/64 DECIMALS ± .005 ANGLES ± 1/2° CORNERS 1/64 × 45° or 1/64 R FINISH 125	DEEP SEA DRILLING PROJECT SCRIPPS INSTITUTION OF OCEANOGRAPHY UNIVERSITY OF CALIFORNIA, SAN DIEGO LA JOLLA, CALIFORNIA 92093				
	TITLE SIGHTING BAR FOR BASE LINE ORIENTATION ~VLHPC~				
SURFACE TREATMENT — 0 —	MATERIAL BRASS	DRAWN BY RK	DATE 3-19-81	CHECKED	APPROVED
HEAT TREATMENT — 0 —	PART NO. OP4330	SIZE DWG. NO. C-OP4330-			REV. 0

REVISIONS					
NO.	DESCRIPTION	DATE	BY	CH.	APR.

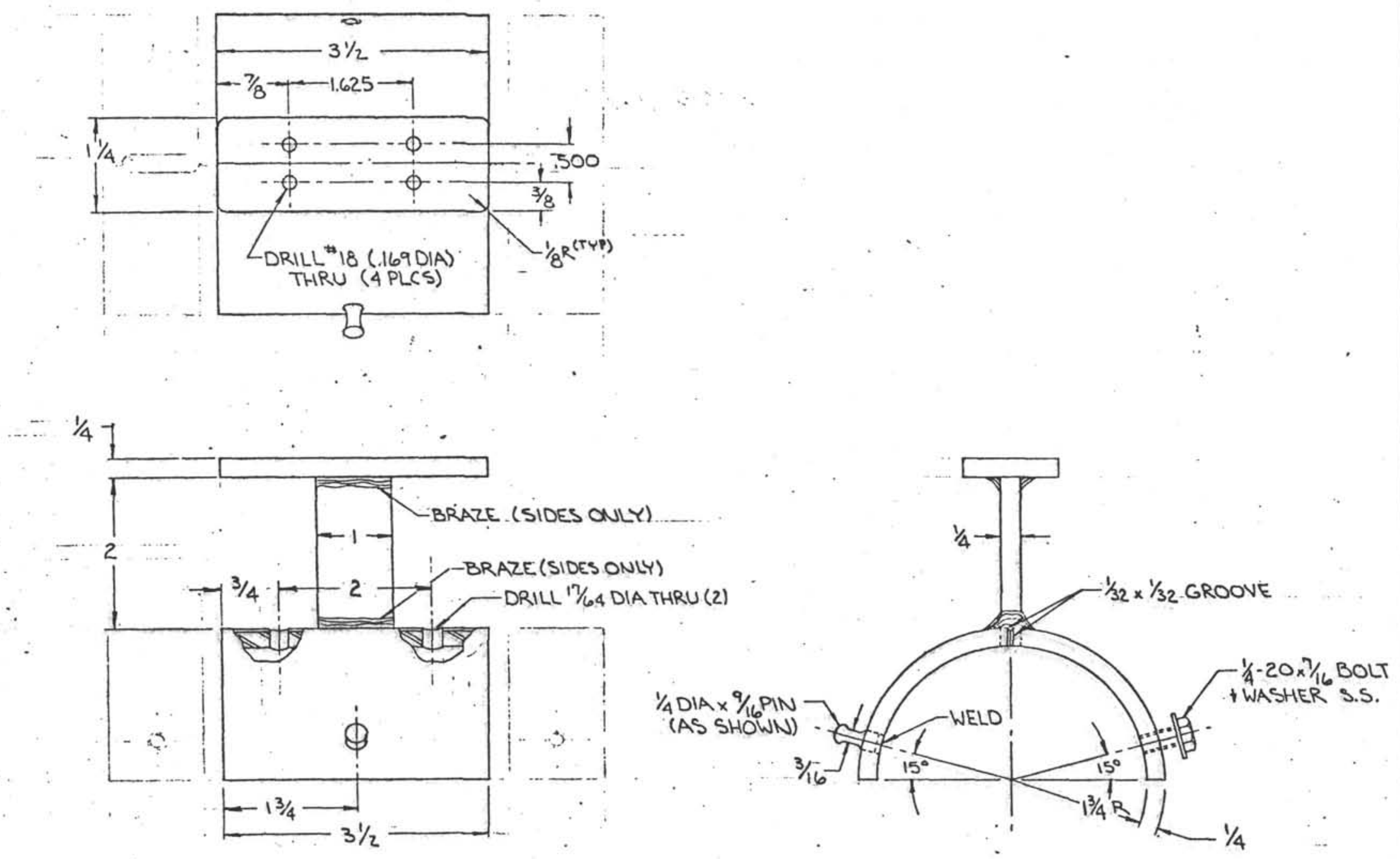

TOLERANCES UNLESS NOTED
FRACTIONS ± 1/64
DECIMALS ± .005
ANGLES ± 1/2°
CORNERS 1/64 x 45° or 1/64 R
FINISH 125

DEEP SEA DRILLING PROJECT
SCRIPPS INSTITUTION OF OCEANOGRAPHY
UNIVERSITY OF CALIFORNIA, SAN DIEGO
LA JOLLA, CALIFORNIA 92093

TITLE
TELESCOPE FRAME F/BASE LINE ORIENTATION ~ VLHPC ~

SURFACE TREATMENT	MATERIAL	DRAWN BY	DATE	CHECKED	APPROVED
—	BRASS	KK	[illegible]		

HEAT TREATMENT	PART NO.	SIZE DWG NO.	REV.
—	OP4331	C-OP4331-	0

REVISIONS					
NO.	DESCRIPTION	DATE	BY	CH.	APR.

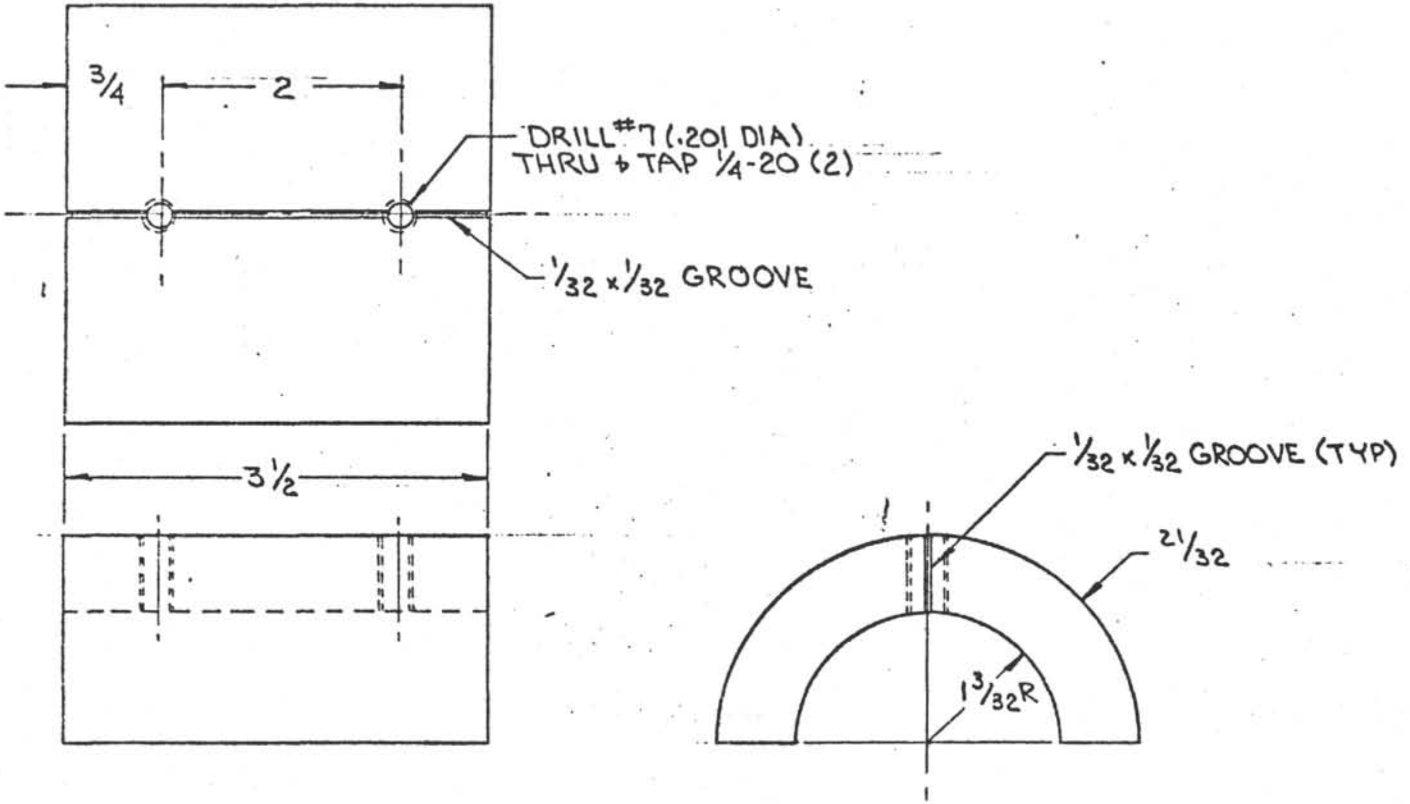

TOLERANCES UNLESS NOTED FRACTIONS ± 1/64 DECIMALS ± .005 ANGLES ± 1/2° CORNERS 1/64 x 45° or 1/64 R FINISH 125	**DEEP SEA DRILLING PROJECT** SCRIPPS INSTITUTION OF OCEANOGRAPHY UNIVERSITY OF CALIFORNIA, SAN DIEGO LA JOLLA, CALIFORNIA 92093 TITLE SIGHTING BAR REDUCER ~VLHPC~				
SURFACE TREATMENT ——	MATERIAL BRASS OR ALUM	DRAWN BY RK	DATE 3-20-81	CHECKED	APPROVED
HEAT TREATMENT ——	PART NO. OP 4332	SIZE DWG. NO. B-OP4332-			REV. 0

REVISIONS					
NO.	DESCRIPTION	DATE	BY	CH.	APR.

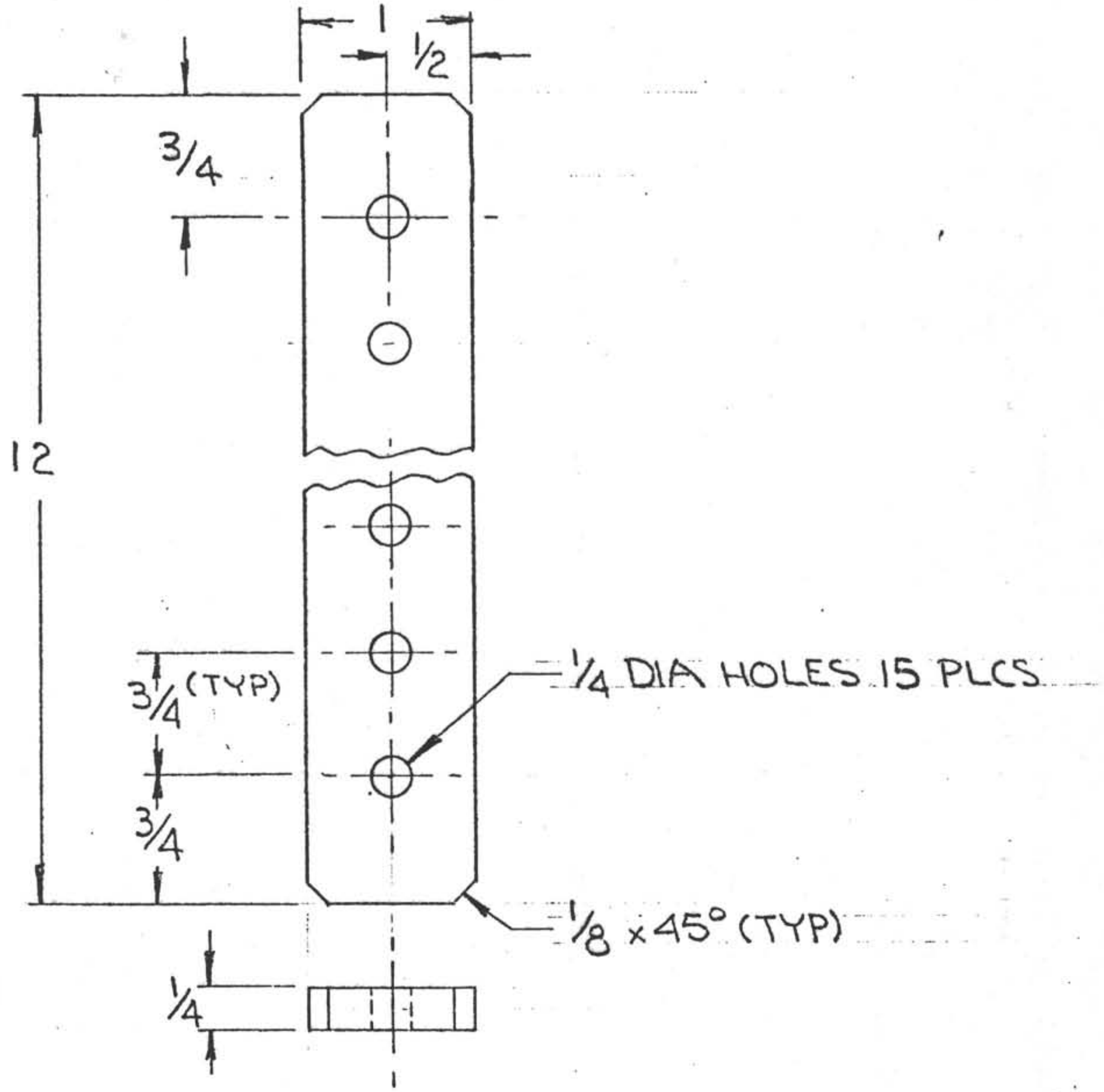

DO NOT SCALE

CONCENTRICITY ALL DIAMETERS: TIR .003

TOLERANCES UNLESS NOTED
FRACTIONS ± 1/64
DECIMALS ± .005
ANGLES ± 1/2°
CORNERS 1/64 x 45° or 1/64 R
FINISH 125 ✓

DEEP SEA DRILLING PROJECT
SCRIPPS INSTITUTION OF OCEANOGRAPHY
UNIVERSITY OF CALIFORNIA, SAN DIEGO
LA JOLLA, CALIFORNIA 92093

TITLE: ORIENTATION HOLD DOWN STRAP ~ VLHPC~

SURFACE TREATMENT ——	MATERIAL NPRN 90 DURO		DATE 3·19·81	BY RK	CHECKED	APPROVED
HEAT TREATMENT ——	SCALE 1:1	REQ'D/ASS'Y 2	PART NO. OP4334		DWG. NO. A-OP4334 (REV.) 0	

REVISIONS

NO.	DESCRIPTION	DATE	BY	CH.	APR.
1	2" WAS TO OUTSIDE	4-16-81	RK		

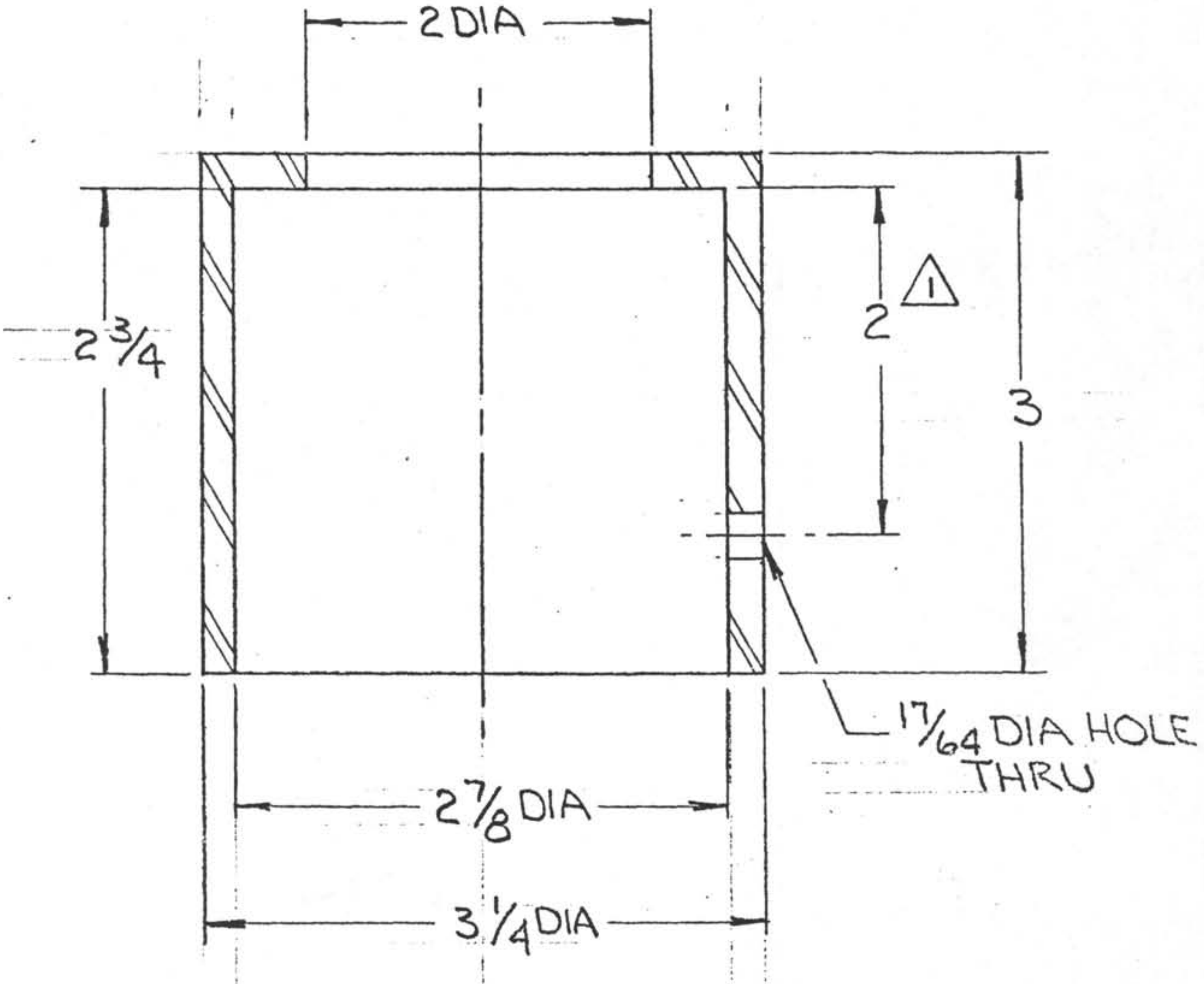

DO NOT SCALE

CONCENTRICITY ALL DIAMETERS: TIR .003

TOLERANCES
UNLESS NOTED
FRACTIONS ± 1/64
DECIMALS ± .005
ANGLES ± 1/2°
CORNERS 1/64 x 45°
or 1/64 R
FINISH 125 ✓

DEEP SEA DRILLING PROJECT
SCRIPPS INSTITUTION OF OCEANOGRAPHY
UNIVERSITY OF CALIFORNIA, SAN DIEGO
LA JOLLA, CALIFORNIA 92093

TITLE
DRILL JIG - CORE LINER
~ VLHPC ~

SURFACE TREATMENT PARKOLUB.	MATERIAL 4140 C.D	DATE 4-1-81	BY RK	CHECKED	APPROVED
HEAT TREATMENT 38-42 Rc.	SCALE 1:1	REQ'D/ASS'Y 1	PART NO. OP 4387-1	DWG. NO. A-OP4389	(REV.) 1

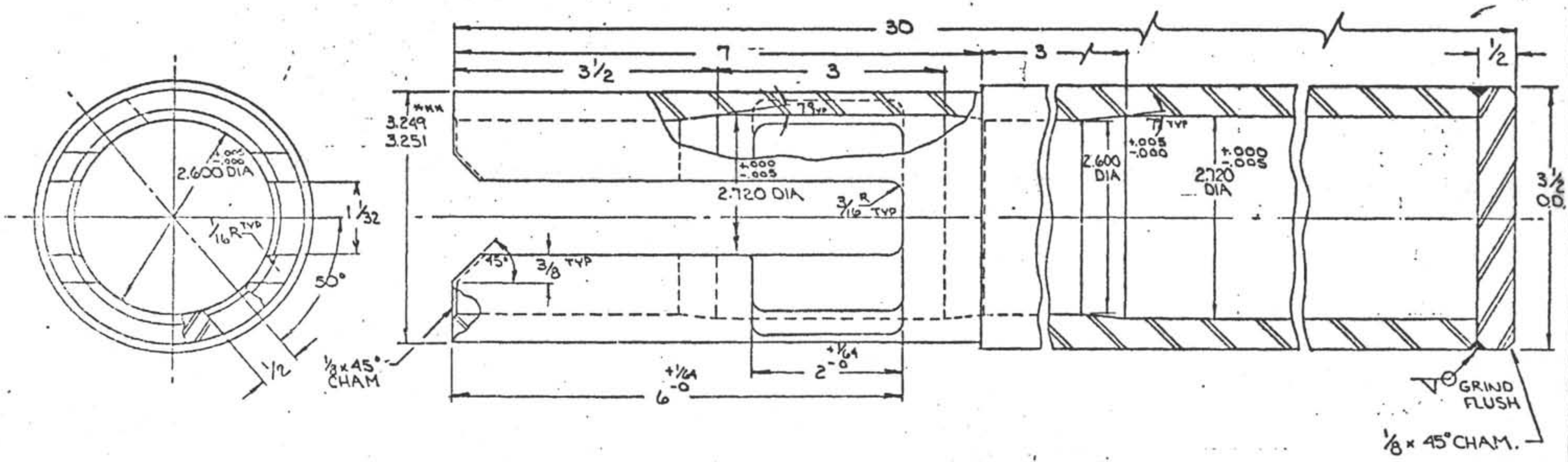

*HEAT TREAT BEFORE MACHINING
**TYP 2 PLCS AT 180°
***FOR SLIP FIT W/ SLEEVE (P/N OP 4336
(SILVER SOLDER > 500°F)

RADIUS ALL SHARP CORNERS AND SHARP EDGES,

TOLERANCES UNLESS NOTED FRACTIONS ± 1/64 DECIMALS ± .005 ANGLES ± 1/2° CORNERS 1/64 × 45° or 1/64 R FINISH 125	DEEP SEA DRILLING PROJECT SCRIPPS INSTITUTION OF OCEANOGRAPHY UNIVERSITY OF CALIFORNIA, SAN DIEGO LA JOLLA, CALIFORNIA 92093					
	TITLE QUICK RELEASE NOSE GUARD ~ VLHPC ~					
SURFACE TREATMENT PARKOLUBE	MATERIAL 4340 STEEL	DRAWN BY KK	DATE 4-83	CHECKED	APPROVED	
HEAT TREATMENT —	PART NO. OP4327	SIZE DWG NO R-OP4327 -				REV. 0

REVISIONS

NO.	DESCRIPTION	DATE	BY	CH.	APR.
1	15/16 WAS 1 1/8	5·12·81	RK	[illegible]	[illegible]

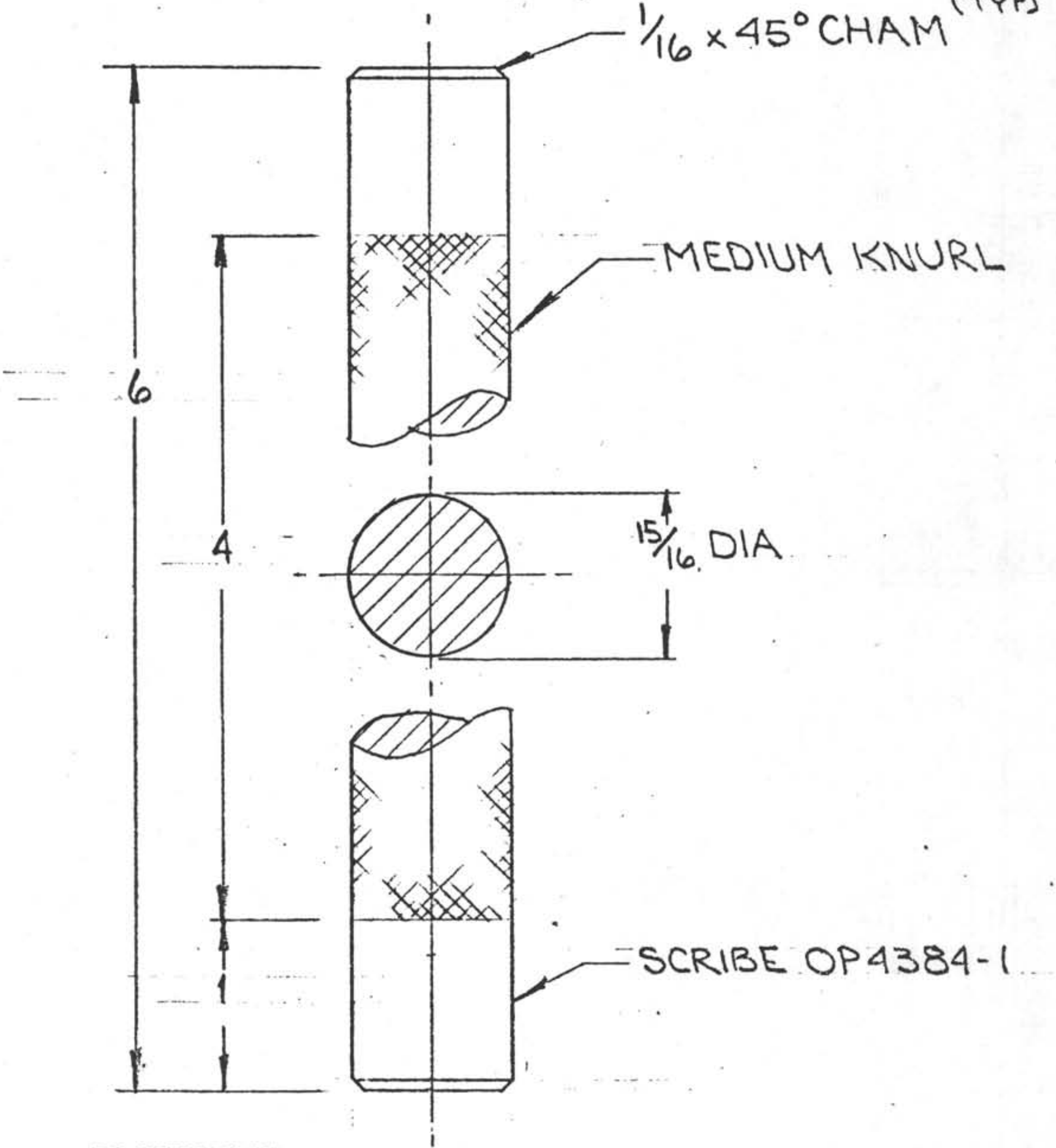

DO NOT SCALE

CONCENTRICITY ALL DIAMETERS: TIR .003

TOLERANCES UNLESS NOTED
FRACTIONS ± 1/64
DECIMALS ± .005
ANGLES ± 1/2°
CORNERS 1/64 x 45° or 1/64 R
FINISH 125 ✓

DEEP SEA DRILLING PROJECT
SCRIPPS INSTITUTION OF OCEANOGRAPHY
UNIVERSITY OF CALIFORNIA, SAN DIEGO
LA JOLLA, CALIFORNIA 92093

TITLE: ASSY BAR FOR SWIVEL ASSEMBLY ~VLHPC~

SURFACE TREATMENT PARKOLUBE	MATERIAL C.R. STEEL		DATE 4·14·81	BY RK	CHECKED [illegible]	APPROVED [illegible]
HEAT TREATMENT	SCALE 1:1	REQ'D/ASS'Y 1	PART NO. OP4384-1		DWG. NO. A-OP4384-1	(REV.)

REVISIONS					
NO.	DESCRIPTION	DATE	BY	CH.	APR.
1	UP DATED PER DETAIL REV.	4-20-80	RL		
2	UP DATED PER DETAIL REV	8-7-80	DR	PG	Bw
3	UP DATED PER DETAIL REV	10-6-81	RK	GT	SS

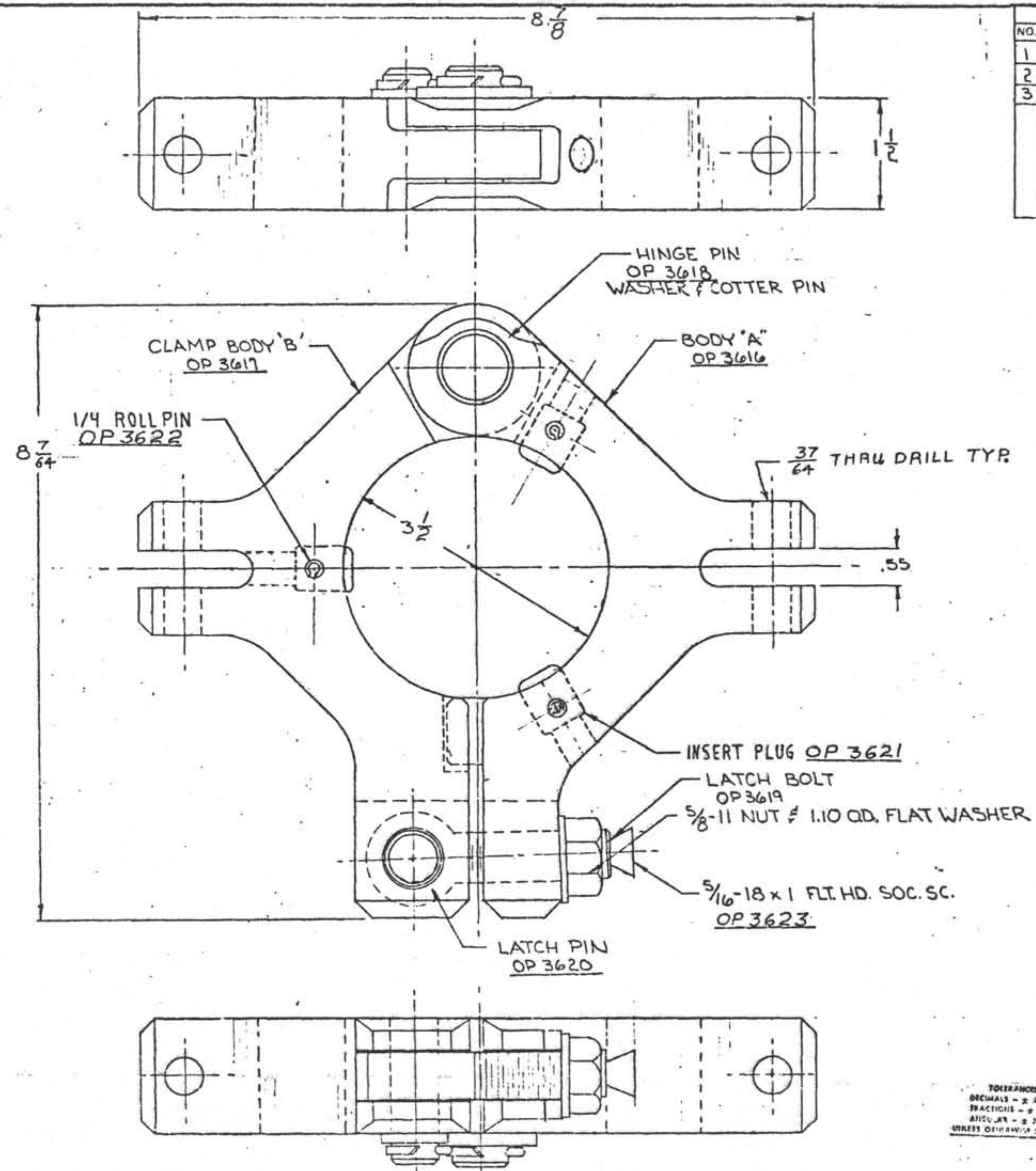

TOLERANCES
DECIMALS – ± .005
FRACTIONS – ± 1/32
ANGULAR – ± 1/2°
UNLESS OTHERWISE SPECIFIED

UNIV. OF CALIF.
DEEP SEA DRILLING PROJ.

SCALE: FULL	APPROVED BY: 3/26 80	DRAWN BY K.L.
DATE: 15 APR 77		REVISED
ASSEMBLY - INNER BB'L LIFTING CLAMP		
PART NO OP 3615-3		DRAWING NUMBER C-OP3615-3

OP 3622 & OP 3623

REVISIONS					
NO.	DESCRIPTION	DATE	BY	CH.	APR.

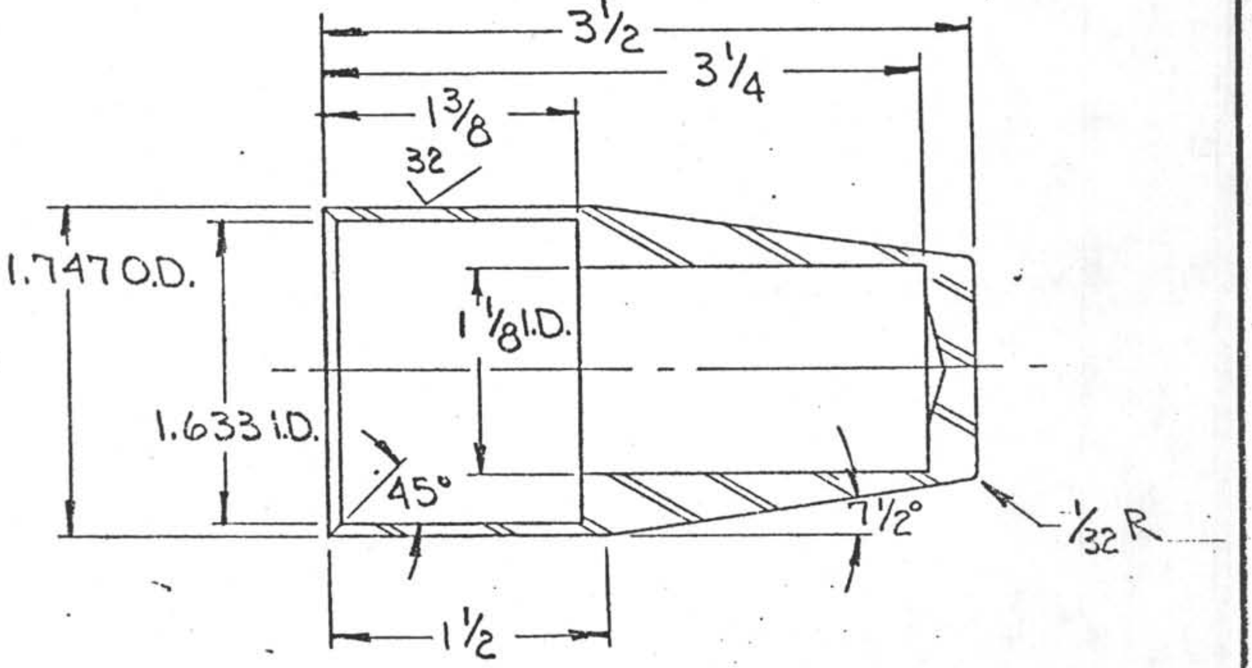

NOTES:
BREAK ALL SHARP EDGES
RADIUS ALL INSIDE CORNERS

DO NOT SCALE

CONCENTRICITY ALL DIAMETERS: TIR .003

TOLERANCES
UNLESS NOTED
FRACTIONS ± 1/64
DECIMALS ± .005
ANGLES ± 1/2°
CORNERS 1/64 x 45°
or 1/64 R
FINISH 125

DEEP SEA DRILLING PROJECT
SCRIPPS INSTITUTION OF OCEANOGRAPHY
UNIVERSITY OF CALIFORNIA, SAN DIEGO
LA JOLLA, CALIFORNIA 92093

TITLE
SEAL INSTALLATION TOOL - PRESS. CASE
~VLHPC~

SURFACE TREATMENT —0—	MATERIAL BRASS		DATE 5·19·81	BY RK	CHECKED	APPROVED
HEAT TREATMENT —0—	SCALE 1:1	REQ'D/ASS'Y —0—	PART NO. OP 4305		DWG. NO. A-OP4305 - 0	(REV.)

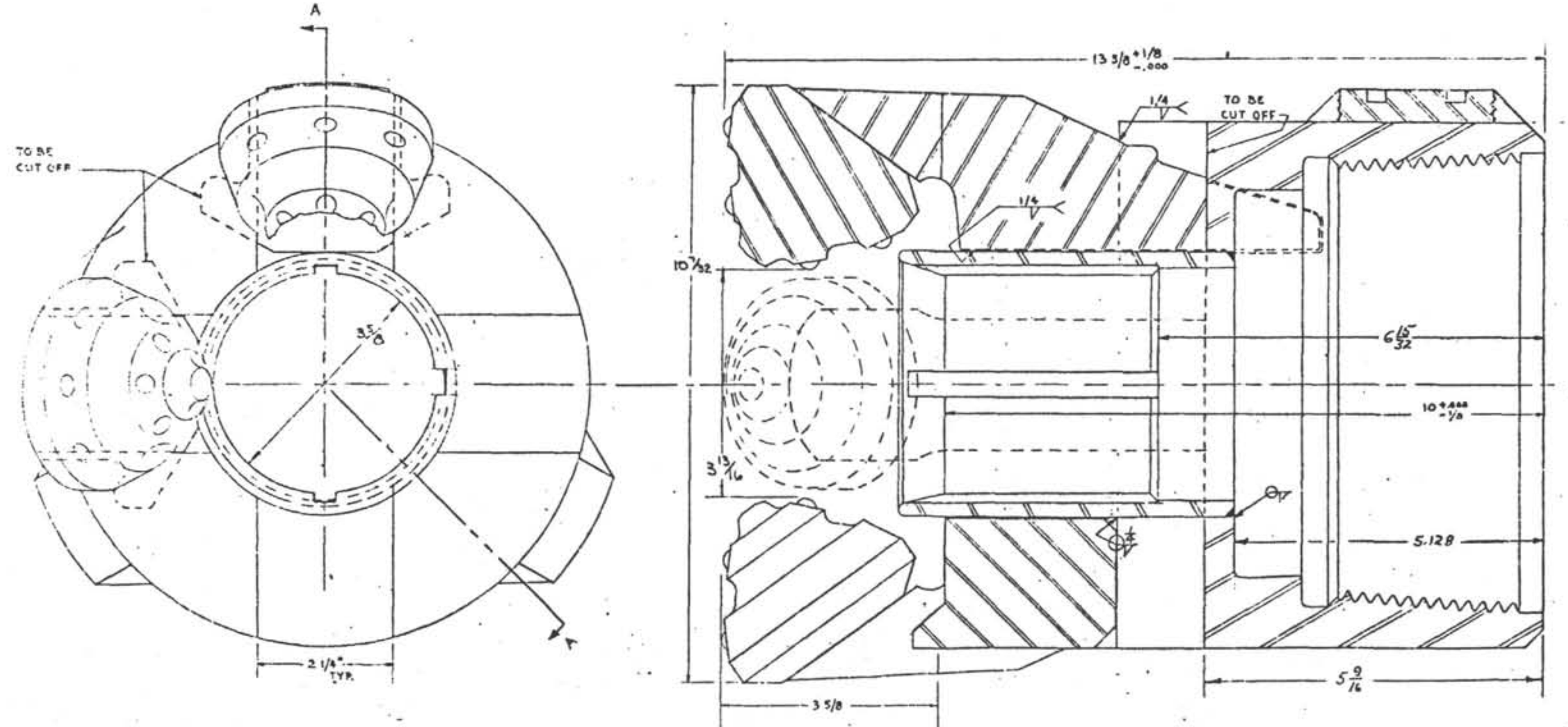

SECTION A-A

FAB. CORE BIT S/N: MSDS-5-32
MSDS-5-33
MSDS-5-34

USED ON: ECB, HPC, VL-HPC

P/N OC 1080

±1/64 ±.005 ±1°

APPROVALS	DATE
JJ	8/60
P3T	

$10\frac{7}{32}$" × $3\frac{13}{16}$" CORE BIT
ASSEMBLY
ECB - HPC - VL-HPC

SCALE 1:1 D D-169A

DO NOT SCALE DRAWING SHEET 1 OF 1

REVISIONS

NO.	DESCRIPTION	DATE	BY	CH.	APR.

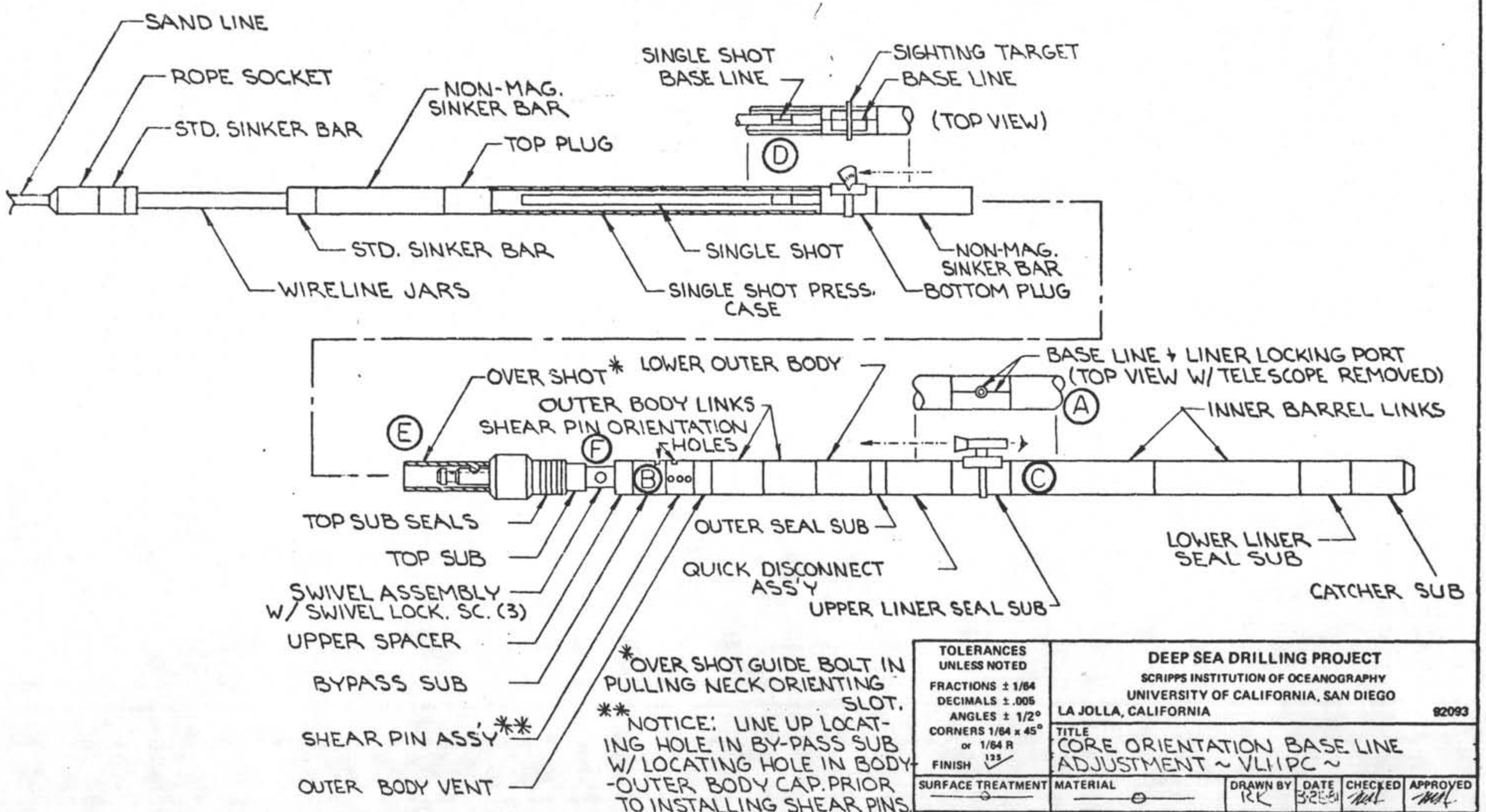

*OVER SHOT GUIDE BOLT IN PULLING NECK ORIENTING SLOT.

**NOTICE: LINE UP LOCATING HOLE IN BY-PASS SUB W/ LOCATING HOLE IN BODY-OUTER BODY CAP. PRIOR TO INSTALLING SHEAR PINS.

TOLERANCES UNLESS NOTED
FRACTIONS ± 1/64
DECIMALS ± .005
ANGLES ± 1/2°
CORNERS 1/64 x 45° or 1/64 R
FINISH 125

DEEP SEA DRILLING PROJECT
SCRIPPS INSTITUTION OF OCEANOGRAPHY
UNIVERSITY OF CALIFORNIA, SAN DIEGO
LA JOLLA, CALIFORNIA 92093

TITLE
CORE ORIENTATION BASE LINE ADJUSTMENT ~ VLHPC ~

SURFACE TREATMENT —⊖—
MATERIAL —⊖—
DRAWN BY RK
DATE 3-25-81
CHECKED
APPROVED
HEAT TREATMENT —⊖—
PART NO. OP4333
SIZE DWG. NO. B-OP4333
REV. O

WAS OD 0036
B-OD 0036

REVISIONS					
NO.	DESCRIPTION	DATE	BY	CH.	APR.
1	UPDATED SEAL SLEEVE	12-17-82	BK		
2	OP3055 REPLACES OP4339	1-20-83	RK		

LIST OF MATERIALS

ITEM NO.	PART NO.	SIZE-DWG. NO.	DESCRIPTION	NO. REQ'D.
	OP4302	A	SOC SET SC 1/2-3 x 3/4	1
	OP4303	A	POLYPAK 18702375	1
	OP4307	B	TOP SUB BODY	1
	OP4309	R	TOP SUB CAP	1
	OP4310	A	RETAINER RING	1
	OP4312	A	SLEEVE	1
	OP4313	B	OUTER BODY VENT	1
	OP4314	B	SHAFT CONNECTOR	2-1
	OP4320	B	SHAFT LINK 4.5m	2-1-0
	OP4321	A	BODY	1
	OP4324	A	MALE ADAPTER	1
	OP4325	A	FEMALE ADAPTER	1
	OP4326	A	V-SPACER	2
	OP4328	B	LOWER OUTER BODY	1
	OP4329	R	BYPASS SUB	1
	OP4335	B	PISTON ROD LINK, 3m	2
	OP4337	B	SLEEVE, QUICK RELEASE	1
	OP4338	C	SUB CAP, "	1
	OP4339	R	SHOULDER SUB, Q.R.	1
	OP4340	B	DOGS, Q.R.	2
	OP4341	A	ROD CONNECTOR	2-1
	OP4342	B	UPPER LINER SEAL SUB	1
	OP4343	B	OUTER BODY LINK 4.5m	1
	OP4344	B	LOWER PISTON ROD	1
	OP4345	A	PISTON SEAL RETAINER	1
	OP4353	B	INNER BARREL, 3m	2
	OP4354	B	SHAFT LINK, 3m	0-1-2
	OP4355	B	LOWER SHAFT	1
	OP4356	B	OUTER BODY LINK, 3m	1
	OP4357	A	SHEAR PIN, 7/32	1
	OP4360	B	LOWER LINER SEAL SUB	1
	OP4361	A	RETAINER, UPPER LINER S. SUB	1
	OP4363	A	OUTER SEAL RETAINER	1
	OP4364	B	UPPER PISTON ROD	1
	OP4365	B	INNER SWIVEL BODY	1
	OP4366	B	SWIVEL RETAINER	1
	OP4367	B	OUTER SWIVEL BODY	1

LIST OF MATERIALS

ITEM NO.	PART NO.	SIZE-DWG. NO.	DESCRIPTION	NO. REQ'D.
	OP4369	A	5/8-11 x 9/16 SET SC	3
	OP4371	B	PISTON ROD LINK, 4.5m	1
	OP4376	B	CATCHER SUB	1
	OP4381	B	QUICK RELEASE PISTON HEAD	1
	OP4382	A	PLASTIC TUBE SUPPORT	1
	OP4383	A	LOCK PIN - PISTON	1
	OP4390	A	MALE V-PACKING ADAPTER	1
	OP4391	A	FEMALE ADAPTER	1
	OP4392	A	V-SPACER	2
	OP4393	—	SEAL RING # 31201250 VP	1
	OP4394	A	MALE ADAPTER	1
	OP4395	A	FEMALE "	1
	OP4396	A	V-SPACER, M/F	2
	OL1010	D	HEAD SUB	1
	OL1019	B	SEAL SLEEVE	1
	OL1020	C	TOP SUB	1
	OC1080	D	10 7/32 x 3 13/16 ECB-HPC-VLHPC BIT	1
	OP3210	B	INNER CORE BARREL 14'-9.5"	2
	OP3055	R-OP3055	SHOULDER SUB	1
	OP3400	A	CORE LINER, BUTYRATE	1

LIST OF MATERIALS

ITEM NO.	PART NO.	SIZE-DWG. NO.	DESCRIPTION	NO. REQ'D.
	OP4112	B	FLAPPER - CORE CATCHER	1
	OP4113	B	CYLINDER "	1
	OP4147	—	O-RING # 2-232	2
	OP4148	—	O-RING # 2-326, NITRIL-70 DURO	4
	OP4150	B	INNER SEAL SUB	1
	OP4151	B	INNER SEAL RETAINER	1
	OP4154	—	V-PACKING (MOLY 2.87 x 2.25)	3
	OP4155	A-1266	ADAPTER, V-PACKING (MF 3 5/8 x 2 7/8)	2
	OP4156	A-1264	" " (MALE " ")	1
	OP4157	A-1265	" " (FEMALE " ")	1
	OP4158	—	V-PACKING (MOLY 3 5/8 x 2 7/8 (37502?5 VP))	3
	OP4160	C-0921	OUTER SEAL SUB	1
	OP4165	—	O-RING # 2-231 (NITRIL-70 DURO)	1
	OP4179	—	V-PACKING 2 x 2.62 (#31202000)	3
	OP4185		SOC SET SC 3/8-16 x 3/2 ALLOY	8
	OR7020	A	CORE CATCHER ASS'Y	1

TOLERANCES UNLESS NOTED
FRACTIONS ± 1/64
DECIMALS ± .005
ANGLES ± 1/2°
CORNERS 1/64 x 45° or 1/64 R
FINISH 125

DEEP SEA DRILLING PROJECT
SCRIPPS INSTITUTION OF OCEANOGRAPHY
UNIVERSITY OF CALIFORNIA, SAN DIEGO
LA JOLLA, CALIFORNIA 92093

TITLE VARIABLE LENGTH HYDRAULIC PISTON CORER ASSEMBLY

SURFACE TREATMENT
MATERIAL
DRAWN BY KK
DATE 5-1-83
HEAT TREATMENT
PART NO. OP 4300-2
SIZE DWG. NO. R-OP4300-
REV. 2

NO.	DESCRIPTION	DATE	BY	CH.	APR.

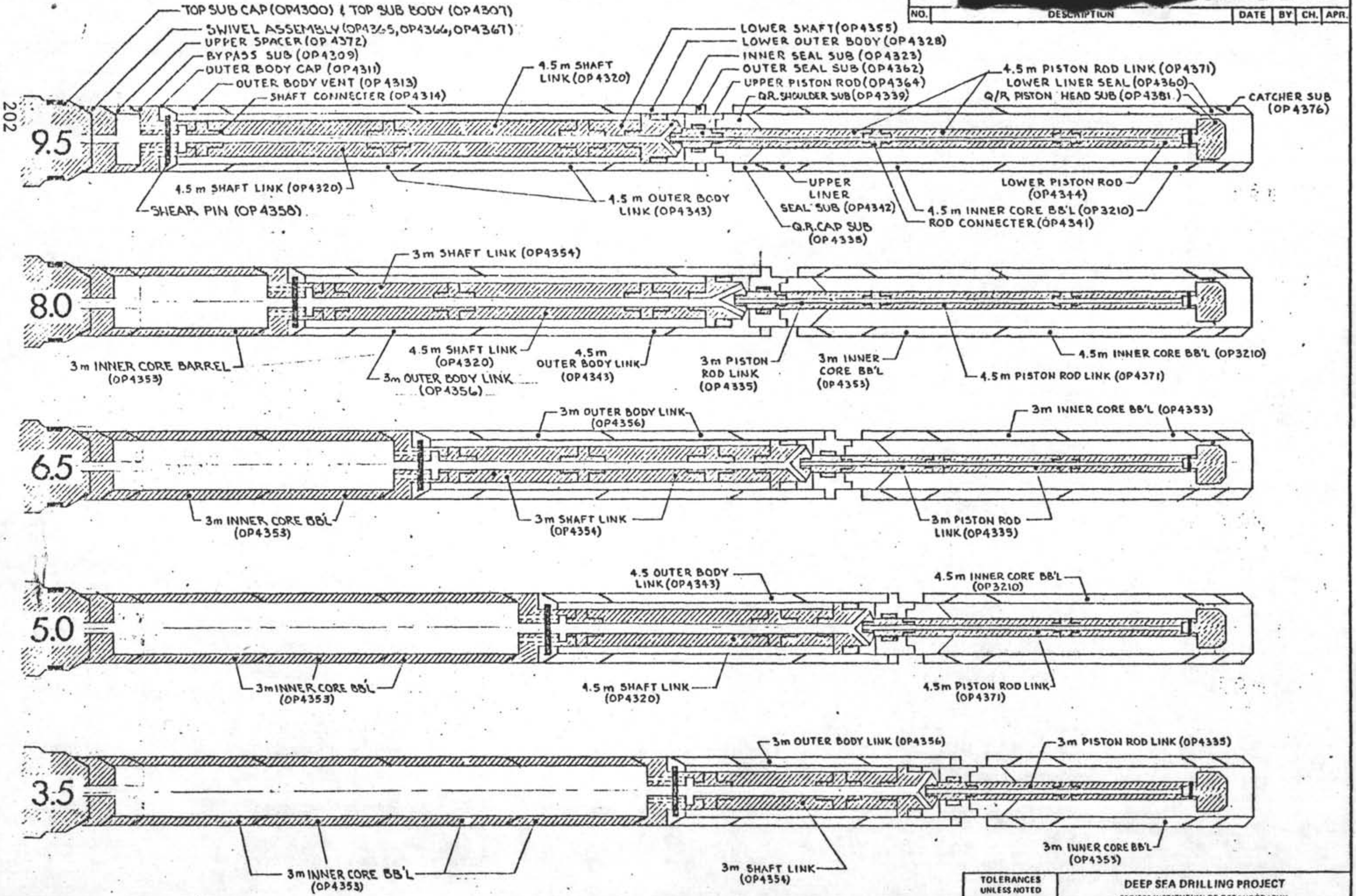

SCHEMATIC OF REQD. COMPONENTS
FOR 9.5, 8.0, 6.5, 5.0 AND 3.5 meter
H.P.C. SYSTEMS

TOLERANCES UNLESS NOTED FRACTIONS ± 1/64 DECIMALS ± .005 ANGLES ± 1/2° CORNERS 1/64 x 45° or 1/64 R FINISH 125 ✓	DEEP SEA DRILLING PROJECT SCRIPPS INSTITUTION OF OCEANOGRAPHY UNIVERSITY OF CALIFORNIA, SAN DIEGO LA JOLLA, CALIFORNIA 92093 TITLE VARIABLE LENGTH PISTON CORER SYSTEM SCHEMATIC				
SURFACE TREATMENT	MATERIAL	DRAWN BY 4i	DATE 3.1.91	CHECKED	APPROVED
HEAT TREATMENT	PART NO. OP4311	SIZE DWG. NO. C-OP4311-			REV. O

REVISIONS					
NO.	DESCRIPTION	DATE	BY	CH.	APR.
1	ADDED OP4351+OP4359	6-29-82	RK		

TOLERANCES UNLESS NOTED FRACTIONS ± 1/64 DECIMALS ± .005 ANGLES ± 1/2° CORNERS 1/64 x 45° or 1/64 R FINISH 125 ✓	DEEP SEA DRILLING PROJECT SCRIPPS INSTITUTION OF OCEANOGRAPHY UNIVERSITY OF CALIFORNIA, SAN DIEGO LA JOLLA, CALIFORNIA 92093				
	TITLE SINGLE SHOT ASSY ~VLHPC~				
SURFACE TREATMENT	MATERIAL	DRAWN BY RK	DATE 3-18-81	CHECKED	APPROVED
HEAT TREATMENT	PART NO. OP4348-1	SIZE DWG. NO. R-OP4348			REV. 1